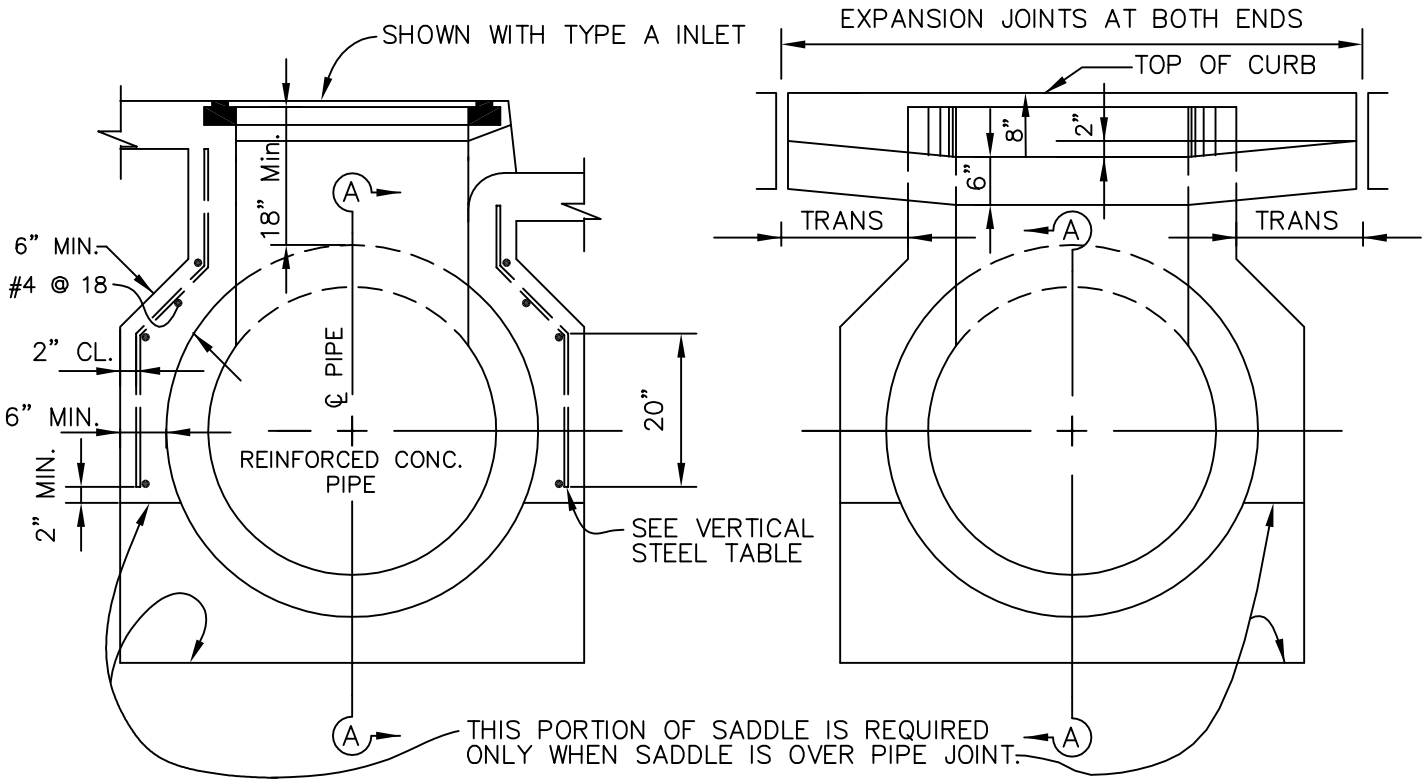

PIPE PARALLEL TO CURB

SCALE: 1/2"=1'-0"

PIPE CROSSING UNDER CURB

SCALE: 1/2"=1'-0"

VERTICAL STEEL TABLE		
PIPE SIZE	STEEL	SPACING
48" AND SMALLER	#4	8"
48" TO 66"	#4	6"
72"	#4	5"

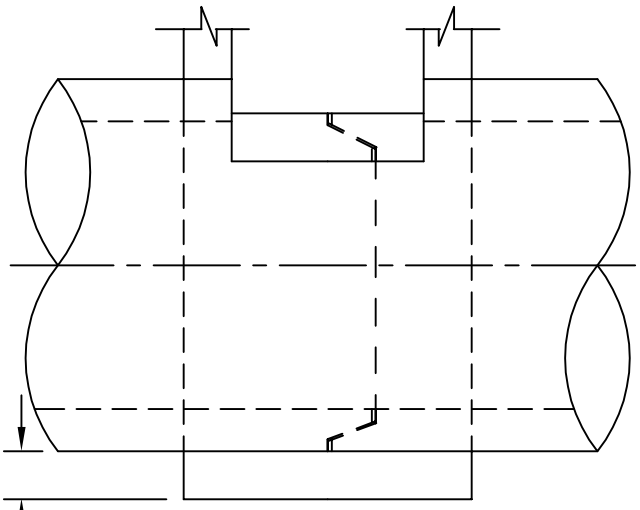

SECTION A-A

SCALE: 1/2"=1'-0"

NOTES:

1. FOR CATCH BASIN DETAILS, SEE UNIFORM CONSTRUCTION STANDARDS DRAWING NOS. 200 THROUGH 255. MAY ALSO BE USED WITH INLETS, PER DRAWING NOS. 260 AND 265.
2. THIS DETAIL MAY BE USED AS AN ALTERNATE WHERE PIPE DIAMETER EXCEEDS DIMENSION OF CATCH BASIN.
3. USE WHERE PIPE DIA. TO STD. CATCH BASIN RATIO IS <3:1, OTHERWISE USE MANHOLE.

UNIFORM STANDARDS ALL CITIES AND COUNTY OF MARIN	SADDLE TYPE CATCH BASIN	REV.	DATE	BY	MAY 2008
					DWG. NO. 270

M:\Standards\County Standards (UCS)\2008 Updated County Standards