SALEMHOWES ASSOCIATES INC

GEOTECHNICAL ENGINEER AND GEOLOGISTS

1202 Grant Avenue, Suite F
Novato, CA 94945
415/892-8528
howesgeo@aol.com

REPORT
GEOTECHNICAL INVESTIGATION

SACRAMENTO AVENUE LOTS
SAN ANSELMO, CA.

14 May 2015

SALEMHOWESASSOCIATES INC.
GEOTECHNICAL ENGINEERS AND GEOLOGISTS

14 May 2015

Mr. Paul Thompson
West Bay Builders, Inc
250 Bel Marin Keys Blvd.
Novato, CA 94949

Job : 0603030

Copy: Jochum Architects

SUBJECT: Report
Geotechnical Investigation,
Lots AP 177-172-09, 177-172-10 & 177-171-03
Sacramento Avenue, San Anselmo

Contents

1202 GRANT AVENUE, SUITE F
NOVATO, CALIFORNIA 94945
(415) 892-8528
FAX 892-8568

Introduction

This report presents the results of our geotechnical investigation of the proposed residential building site located at the above address. It conforms to the requirements of section 1803 in the 2013 California Building Code (CBC). The purpose of our investigation was to evaluate the geotechnical feasibility of the proposed development, assess the suitability of the building site, and provide detailed recommendations and conclusions as they relate to our specialty field of practice, geotechnical engineering and engineering geology. The scope of services specifically excluded any investigation needed to determine the presence or absence of issues of economic concern on the site, or of hazardous or toxic materials at the site in the soil, surface water, ground water, or air.

If this report is passed onto another engineer for review it must be accompanied by the approved architectural and structural drawings so that the reviewer can evaluate the exploration and data in the context of the complete project. Ground conditions and standards of practice change; therefore, we should be contacted to update this report if construction has not been started before the next winter or one-year from the report date.

For us to review the drawings for compliance with our recommendations the four following notes must be on the structural drawings:

- The geotechnical engineer shall accept the footing grade / pier holes prior to placing any reinforcing steel in accordance with the CRC requirements. Notify geotechnical engineer before the start of drilling. (If that isn't stated they may require inspections in accordance with CBC Section 1702-Definitions, "Special Inspections, Continuous". This would require a full time inspector during drilling.)
- Drainage details may be schematic, refer to the text and drawings in the geotechnical report for actual materials and installation.
- Refer to Geotechnical Report for geotechnical observation and acceptance requirements.

Along with the structural drawings, to complete the review, we need the pertinent calculations from the structural engineer or the geotechnical design assumptions should be included on the drawings notes per requirements of the 2013 CBC.

- ***It is the owner's responsibility*** that the contractor knows of and complies with the BMP's (Best Management Practices) of the Regional Water Quality Control Board, available at www.swrcb.ca.gov, ↲ water quality ↲ stormwater ↲ construction

The fieldwork consisted of reconnaissance mapping of exposed geologic features on the site and in the immediate surrounding area and the excavation of nine test pits by a tract mounted excavator Fieldwork was conducted in September of 2007 and reviewed in October of 2014. During this period we reviewed select geotechnical references pertinent to the area and examined stereo-paired aerial photographs of the site, which were available from Pacific Aerial Surveys in Oakland.

Summary

Albeit relatively steep, there is only a nominal seven feet of soil cover over stable bedrock. The road cuts will be bottomed in bedrock and the structure will have foundations which are supported on bedrock. Construction of the driveway near the gully banks will remove any soil down to stable bedrock. LTD Engineering has appropriately addressed the drainage in these areas and from the

existing improvements and proposed improvements along Sacramento Avenue, this is not in the scope of the geotechnical report. We have reviewed the civil drawings by LTD Engineering revision 2, 3 October 2014 and find that they incorporate our geotechnical recommendations. We judge that the proposed development as shown on the project drawings by Jochum Architects revision 07 April 2015 conforms to our geotechnical recommendations and is appropriate for the geologic and soils conditions at the site. Following standard Marin hillside construction practices the development of the driveway and house sites will not have a negative affect the stability of the hillside.

Geology and Slope Stability

The geology and geomorphology of the site has been mapped by others[(1)] as a collection of metasediment rocks (sandstone [ss], greenstone [gs] and chert [ch] of the mélange unit[fm] of the Franciscan geologic assemblage, which are covered by Debris Flow Landslide deposits (open arrow symbol on Rice's map[(1)]). We did not see evidence of a old debris flow, rather it appears to be an area of continuous downslope creep of the surface zone (crinkly arrow[(1)]). Rock is not exposed on the site; however soil and rock deposits resembling those described in the literature were encountered in all of the test pits.

The soil layer exhibits geomorphic features (hummocky ground, small scarps and circ cracks) that are representative of active soil creep. Except for one small local landslide in the vicinity of Test Pit E, there are no large ancient or potential landslide areas that would impact the proposed building sites. The active soil creep zone can be mitigated by creep resistant structures design to resist the active loads.

Ground Water

Ground water was not observed in the test pits during our investigation. However, ground water conditions vary with the seasons and annual fluctuations in weather. A general rise in ground water can be expected after one or more seasons of above average rainfall. Based on the limited time we have been able to collect ground water data on this site, it is not possible to accurately predict the range of ground water fluctuations in the future. Therefore, ground water sensitive structures such as basements, wine cellars and swimming pools should be designed to anticipate a rise in the water level that could potentially affect their function and stability. During construction it should be anticipated that ground water will be encountered at the rock/soil contact.

Earthquake Hazards and Seismic Design

This site is not subject to any unusual earthquake hazards, located near an active fault, within a current Alquist-Priolo Special Studies Zone or Seismic Hazards Zone as shown on the most recently published maps form the California Geologic Society. There were no geomorphic features observed in the field or on air photos, or geologic features in the literature that would suggest the presence of an active fault or splay fault traces. However, historically the entire San Francisco Bay Area has the potential for strong earthquake shaking from several fault systems, primarily the San Andreas Fault which lies approximately seven miles to the southwest and the Hayward/Rodgers Creek Faults, 10 miles to the northeast. The U.S. Geologic Survey presently estimates [(2)] there is up to 21 percent chance of a major quake (Magnitude 8) from 2000 to 2030 on the San Francisco Bay region segment of the San Andreas Fault. The probability is lower north of San Francisco and increases to the south. However, in the same period, there is a 32 percent chance of a major event (Magnitude 7) on the Hayward fault and Rodgers Creek Faults. The total 30-year probability of one or more large earthquakes occurring in the entire San Francisco region is 70 percent (see Plate 1). Based on the bedrock and soils observed at the site, we do not anticipate those seismically induced hazards,

specifically: liquefaction, settlement and differential compaction, landsliding, and flooding are present. Generally speaking structures founded on bedrock fare far better during an earthquake than structures on soil, fill or bay mud.

For California Building Code design purposes on this site the top 100 feet of the ground has an average Soil Profile Site of Class B per section 1613.3.2. Seismic Design Site Class and ground-motion parameters, as required by CBC and ASCE 7 may be obtained from the calculator on the USGS web site at http://earthquake.usgs.gov/research/hazmaps/design. For seismic design categories D, E or F refer to the Exception in the CBC. In California, the standard of practice requires the use of a seismic coefficient of 0.15, and minimum computed Factor of Safety of 1.5 for static and 1.1 to 1.2 for pseudo-static analysis of natural, cut and fill slopes.

Retaining walls which support tall rock cuts will stand vertical with only nominal shoring to prevent weathering. This inherently means there is no active pressure in the rock zone. Therefore, only a nominal value for active pressure is required to support the rock. For seismic analysis the dynamic loads from a slope only occur from the Rankine wedge, which in soils is typically 30 to 40-degrees (from the vertical) in a Ø type material. However, with rock slopes the Rankine wedge is non-existent to near vertical. Consequently there is no measurable seismic force from the slope on the wall in a rock section. In a thin soil section (< 4-ft) the active pressure of 45 lbs/ft^3 is sufficiently conservative to account for any additional seismic loading. In thicker soil sections a simple approach[6] is to include in the design analysis an additional horizontal force P_E to account for the additional loads imposed on the retaining wall by the earthquake, as follows:

$P_E = \frac{3}{8} (\alpha_{max})\gamma_t{}^{*}H^2$ (acting at a distance of 0.6H above the base of the soil layer)

Where H = height of soil section, α_{max} = 0.15 & γ = unit weight of soil in slope. Because P_E = is a short–term loading it is common to allow a ⅓ increase in bearing pressure and passive resistance for earthquake analysis. Also, for the analysis of sliding and overturning of the retaining wall it is acceptable to lower the factor of safety to 1.1 under the combined static and earthquake loads[7].

As a homeowner there are a number of measures one can take to limit structural damage, protect lives and valuable objects in the event of a major earthquake. To be prepared and understand the mechanics of earthquakes we strongly recommend that you purchase a very practical book entitled "Peace of Mind in Earthquake Country" by Peter Yanev. This book is written for the homeowner and, while currently out of print, used copies are available in paperback (Chronicle Books/S.F.) from Amazon.com and other locations.

Site Conditions

The bedrock is overlain by an average of ten feet of hard soil, which stood vertically in ten foot deep test pits during our exploration. Nevertheless, it is soil and compliance with CalOSHA requlations any cuts over five feet high will require shoring. While the soil is hard, only in Test Pit D the backhoe encountered refusal. The rock, although hard, is normally highly fractured and can usually be drilled/excavated by commonly available equipment. Ground conditions were reasonably consistent over the site and the typical site section on Drawing B will be encountered at both house sites and the access driveways.

Structures with foundations on rock will not experience any measurable settlement and there are no conditions that require provisions to mitigate the effects of expansive soils, liquefaction, soil strength or

adjacent loads. The slope setback provisions in section 1806 of the UBC do not apply to foundations on slopes that are bottomed in bedrock.

Foundation Conditions

Sandstone bedrock lies between the surface and six feet below. The depth to the top of bedrock at the location of the test pits is shown on Drawing A. The overlying soil is stiff and will stand in vertical cuts up to five feet when dry. During winter construction shoring will be required. In wet weather ground water can be expected at the soil/rock contact. The rock, albeit hard, is generally highly fractured and can normally be excavated by common means; however, hard massive areas may be encountered that could require the use of an excavator mounted "hoe ram". Rock slopes over six feet high will require shoring. This is normally most economically accomplished by rock doweling and covering with wire mesh in lifts as the excavation progresses downward. Rock slopes will stand vertically for short periods of time; however, as they are exposed to air and start to dry out block failures will occur; this can happen as soon the night after excavation.

Design Recommendations

Bedrock lies between seven and ten feet below the surface in the project area. The depth to the top of bedrock at the location of the test borings is shown on Drawing A. The overlying soil is stiff and will stand in vertical cuts up to five feet when dry. During winter construction shoring will be required. In wet weather ground water can be expected at the soil/rock contact. The rock, albeit hard, is generally highly fractured and can normally be excavated by common means; however, hard massive areas may be encountered that could require the use of an excavator mounted "hoe ram" or core barrel. CalOSHA regulations require shoring on rock cuts over six feet. This is normally most economically accomplished by rock doweling and covering with wire mesh in lifts as the excavation progresses downward. Rock slopes will stand vertically for short periods of time; however, as they are exposed to air and start to dry out block failures will occur; this can happen as soon as the night after excavation.

No laboratory testing was performed; since all foundations will be in rock, soil properties, such as moisture and density, do not provide any relevant engineering data for foundation design. In view of the fact that bedrock features in the Franciscan Formation can rarely be correlated over short distances, testing of small rock pieces provides no viable data for use in design. We based our recommendations on assessment of rock mass properties. During exploration in situ testing and sampling of the soil was performed by Standard Penetration Tests (ASTM D-1586)*. We will continue to evaluate the ground conditions during excavation and modify our recommendation if warranted.

Bedrock is not exposed on the site; however there are outcrops in the area for evaluation of engineering properties. The contractor may use these exposures to determine the difficulty of excavation and the appropriate type of equipment to use.

Structures with foundations on rock will not experience any measurable settlement and there are no conditions that require provisions to mitigate the effects of expansive soils, liquefaction, soil strength or adjacent loads. The slope setback provisions in §1808.7 of the CBC do not apply to foundations

on slopes that are bottomed in bedrock. Except for seismic none of the requirements in CBC § 1803.5.11 and .12 apply.

Summary of Design Values

The design engineer should compare the topography, building elevations and geotechnical report to determine the appropriate active earth pressures to be used. The actual type of foundation should be determined by the architect and design engineer based on construction and economic considerations.

- Seismic Design (See Earthquake Hazards Section)
  Soil Profile Site Class Type B, Ground motion parameters from USGS web site at http://earthquake.usgs.gov/research/hazmaps/design with site coordinates.
- Active earth pressure:
  In a Soil Section = 60 lbs/ft^3 equivalent fluid pressure
  In a Rock Section = 35 lbs/ft^2 (pounds per square foot)
- Allowable Bearing Capacity (P_{allow})
  $P_{allow.}$ = 0.33 * 10.0 * (footing width in feet) = (kips/ft^2) (Not to exceed 10.0)
  A 20-percent increase is allowed for each additional foot, beyond one-foot, of depth that the footing is excavated into the subgrade.
- Lateral Bearing in Rock
  Passive equivalent fluid pressure of 800 lbs/ft^3 and a friction factor of 0.45 to resist sliding. They may be combined and a one third increase is allowed for transitory loading.
- Pier Design (Per UBC section 1806.8.2.1)
  Rock passive pressure: 800 lbs/ft^2/ft to calculate S_1 or S_3
  Adhesion: 900 lbs/ft^2
- Tiebacks
  Refer to Table 1
- Drainage
  Include items in "Drainage Check List"

Details on the application of these design values are included in the following sections of this report.

Drilled Piers

Drilled, cast-in place, reinforced concrete piers should be a minimum of 18 inches in diameter and should extend at least six feet into competent bearing stratum as determined by the Engineer in the field. The structural engineer may impose additional depths. The piers shall extend into the bearing stratum six feet below a 30° line projected up from the bottom of the nearest cut slope or bank. Piers should be designed to resist forces from the gravitational creep of the soil layer. The height of the piers subject to the creep forces is equal to the depth to the top of rock. For design purposes on this project, this may be, interpolated from the data on Drawing A. Creep forces should be calculated using an equivalent fluid pressure of 60 lbs/ft^3 (Fig 16, NAVFAC(4)) acting on two pier diameters. Because the rock and soil are discontinuous media, for geotechnical considerations, the piers should have a nominal spacing of 10 feet on center and connected by tie and grade beams in a grid like configuration. Isolated interior and deck piers should be avoided. Normally end bearing should be neglected (see conditions below).

Piers should be designed by the formula in section 1806.8.2.1, Uniform Building Code 1997 (UCB), with 'P' equal to the soil creep forces between the surface and top of rock (plus any lateral loads from the structure) and 800 lbs/ft^2/ft used to calculate 'S_1' or 'S_3'. ***Note*** that in this formula 'b' is the actual diameter of the pier not a multiple and 'h' is measured from the point of fixity. These values are not appropriate for other methods of design. The structural engineer should contact us for the applicable values if another method of pier design is to be used.

We judge that when piers are in a full cut fixity occurs at the rock surface and the conditions result in a constrained top of the pier. For this case the depth may be calculated by using the UBC formula in section **1806.8.2.2 Constrained.**

Design Parameters

Depth of fixity below top of bedrock surface for a sloping area:	1.5 feet
Soil active pressure:	60 lbs/ft^3
Rock active pressure:	$K_a = 0.0$
Rock passive pressure:	800 lbs/ft^2/ft to calculate S_1 or S_3
Adhesion:	900 lbs/ft^2

The values recommended for the calculation of "S" incorporate a 1.5 factor of safety. There is no requirement for the retaining wall designer to add an addition factor of safety for overturning.

In order for these strength values to be realized, the sides of the pier holes must be scaled of any mudcake.

End bearing may be used if the bottoms of the holes are thoroughly cleaned out with a "PG&E" spoon or other means. Drilled piers may be any convenient diameter that allows for readily cleaning the bottom of the holes. The end allowable bearing capacity may be determined as follows:[4]

$$P_{allow.} = 0.33 * 10.0 * (\text{pier width in feet}) = (\text{kips/ft}^2) \quad (\text{Not to exceed } 10.0)$$

Bearing may be increased 10 percent of the allowable value for each foot of depth extending below one foot of the rock surface.

Notice: We will not accept the foundation for concrete placement if the pier holes are over 48 hours old and will require that they be redrilled. One should plan ahead and have the pier cages assembled prior to drilling the holes so that there is no delay in placing the concrete. The contractor may submit plans for remedial measures, such as spraying or covering the excavation, to extend this time period. However, acceptance is always subject to the condition of the foundation grade immediately prior to the pour.

Ground water may be encountered in the drilled pier holes and it may be necessary to dewater, case the holes and/or place the concrete by tremie methods. All construction water displaced from the pier holes must be contained on site and filtered before discharging into the storm water system or natural drainages. Hard drilling will be necessary to reach the required depths. The contractor should be familiar with the local conditions in order to have the appropriate equipment on hand. The rock to be encountered in the drilling can be observed in outcrops in the area.

Footings

Footing foundations may be used where the entire footing is excavated into unweathered rock. For retaining wall footings the toe of the footing must be excavated into rock, if a keyway is not used the top of the toe must have three feet of horizontal confinement in the unweathered rock.

As a minimum, spread footings should conform to the requirements of Table 18-I-C, section 1809 of the UBC except that the "Depth Below Undisturbed Ground Surface" in Table 18-I-C shall be interpreted as to mean "The Depth Below the Top of Weathered Rock". The footings should be stepped as necessary to produce level bottoms and should be deepened as required to provide at least 10 feet of horizontal confinement between the footing base and the edge of the closest slope face. In addition, the base of the footing should be below a 30 degree line projected upward from the toe of the closest slope. For geotechnical considerations, since rock and soil are discontinuous media, footings should be connected up and downslope in a grid like fashion by tie beams. Isolated interior and deck footings should be avoided.

The maximum allowable bearing pressure for dead loads plus Code live loads for footing type foundations can be determined by the following formula[4] :

$$P_{allow.} = 0.33 * 10.0 * (\text{footing width in feet}) = (\text{kips/ft}^2) \quad \text{(Not to exceed 10.0)}$$

A 20-percent increase is allowed for each additional foot, beyond one-foot, of depth that the footing is excavated into the subgrade. The portion of the footing extending into the undisturbed subgrade may be designed with a coefficient of passive earth pressure (K_p) equal to 6.0 with rock unit weight of 135 lbs/ft^3 or a passive equivalent fluid pressure of 800 lbs/ft^3 and a friction factor of 0.45 to resist sliding. Lateral bearing and lateral sliding may be combined and a one third increase is allowed for transitory loading.

Retaining Walls

All retaining walls should be supported on rock by piers or spread footing type foundations. Design parameters for retaining wall foundations are covered under the appropriate section for footings or drilled piers. The toe of footing type retaining walls should be excavated below grade and the concrete poured against natural ground, the toe should not be formed.

Retaining walls should be designed for a coefficient of active *soil* pressure (K_a) equal to 0.41, or an equivalent fluid pressure of 60 lbs/ft^3[(Fig 16 Ref 4)]. Since the backfill never truly provides rigid support that prevents mobilization of the active pressure, this value is appropriate for normal or restrained walls. For rigid, tiedback retaining walls that support *soil* slopes an "at rest" value of the coefficient of active soil pressure (K_o) equal to 0.55 or 72 lbs/ft^3 equivalent fluid pressure should be used. The portion of any wall *supporting a rock backslope may be designed for a pressure of 35 lbs/ft^2* (yes, that is square feet), with a K_a equal to 0.25. See Drawing A for the depth of soil. Any wall where the backfill is subject to vehicular loads within an area defined by a 30-degree (from vertical) plane projected up from the base of the wall should have the design pressure increased equivalent to a 200-lbs/ft^2 (q') surcharge. In this case if a uniform surcharge load q' acts on the soil behind the wall it results in a pressure P_s in lbs/ft. of wall equal to:

$$P_s = q' * (\text{height of wall}) * K_a$$

It acts midway between the top and bottom of the wall.

Or the design height of wall may be increased two feet to account for the surcharge.

Allowable foundation bearing and lateral resistance to sliding should be obtained from the formulae in the respective sections on pier or footing foundations. When short rigid drilled piers are used in lieu of a keyway they may be designed as per section 1807.3.2.2 Constrained.

If the shoring is constructed with rock bolts (see following sections), reinforced shotcrete may be used in lieu of structural concrete walls. Conventional concrete structural retaining walls may be constructed without forming by using shotcrete and chimney drains. However, complete waterproofing with this system is very difficult and one should consult a waterproofing specialist.

Piers for 'garden' type walls (supporting only landscaping) founded in the stiff soil may be designed using the criteria in section 1806.8.2.1 of the UBC, with an allowable lateral bearing pressure of 200 lbs/ft^2/ft of depth. Also Marin County Standard Type A, B or C may be used [5]. However, it must be understood that due to the active creep of the soil layer such wall are subject to rotational creep over time.

All retaining walls should have a backdrainage system consisting of, as a minimum, drainage rock in a filter fabric (e.g. Mirafi™ 140N) with at least three inch diameter perforated pipe laid to drain by gravity. If Caltrans specification Class 2 Permeable is used the filter fabric envelope may be omitted. The pipe should rest on the ground or footing with no gravel underneath. **The pipe should be rigid drainpipe, 3000 triple wall HDPE, 3 or 4 inch ID, ASTM F810**. Pipes with perforations greater than 1/16 inch in diameter shall be wrapped in filter fabric. A bentonite seal should be placed at the connection of all solid and perforated pipes. All backdrainage shall be maintained in a separate system from roof and other surface drainage. Cleanouts should be provided at convenient locations, that is a plumbing and maintenance consideration and not a geotechnical concern.

Retaining walls which are adjacent to living areas should have additional water proofing such as three dimensional drainage panels and moisture barriers (e.g. "Miradrain™ 6000" panels and "Paraseal™") and the invert of the drainage pipe should be a minimum of four inches below the adjacent interior finished floor elevation. Drainage panels should extend to 12 inches below the surface and be flashed to prevent the entry of soil material. The heel of the retaining wall footing should be sloped towards the hill to prevent ponding of water at the cold joint, the drainage pipe should be placed on the lowest point on the footing. The backslope of the retaining walls should be ditched to drain to avoid infiltration of surface run-off into the backdrainage system. All waterproofing materials must be installed in strict compliance with the manufacturer's specifications. A specialist in waterproofing should be consulted for the appropriate products, we are not waterproofing experts and do not design waterproofing, we only offer general guidelines that cover the geotechnical aspect of drainage.

Typical retaining wall drainage details are attached.

Tiebacks

The anchor section of the tieback must be in unweathered bedrock. The capacity of tiebacks should be determined by the methods in Table 1, Capacity of Anchor Rods in Fractured Rock[4]. While a

ten-foot long unbonded length is preferred it is not necessary to develop the low capacity tieback normally required for retaining wall stability.

Regardless of the type of anchor used (e.g. mechanical, grouted or helical) tiebacks must meet the following two criteria:

- Proof testing to 1.25 times the design capacity
- Depth of anchor must equal or exceed that determined by Table 1

The structural engineer should prepare detailed shop drawings, for approval, of the specific materials and connection methods to be used at the bulkhead. Installation should follow manufacturer's specifications. The anchor rods should be high strength threaded rods specifically manufactured for this application, such as "Williams" or "Dywidag" threadbars. For corrosion protection contact the manufacturer.

Grout should be tremmied to the bottom of each hole so that when the bar is inserted the grout will be displaced to the surface. The bar should be provided with centering guides, and when placed in the hole rotated and vibrated several times to assure thorough contact between the bar and grout.

When the grout has obtained the desired strength the anchor bars should be tested to 125 percent of the design load and tied off at a designated post tensioning load, normally about 33 percent of the design load. The lift-off readings should be taken after the nut has been set to confirm the post tensioning. Typical tieback configuration is attached.

Slab on Grade Construction

Slab on grade construction which spans cut and fill or rock and soil sections will settle differentially and crack. Therefore this type of construction is not recommended for living areas or garages unless the areas are completely excavated into rock or underlain by compacted fill or the slab is designed as a structural slab. If the slab is underlain by a wedge of fill or natural soil over rock a floating slab will still settle differentially, sloping towards the thickest section of fill. Because the loads on a floating slab are usually small the settlement may be negligible.

The base for slabs on grade should consist of a 4-inch capillary moisture break of clean free draining crushed rock or gravel with a gradation between 1/4 and 3/4 inch in size. The base should be compacted by a vibratory plate compactor to 90 percent maximum dry density as determined by ASTM D-1557. A 10-mil impermeable membrane moisture vapor retarder should be placed on top of the gravel. The gravel should be "turned down" by a vibratory roller or plate to provide a smooth surface for the membrane. Recycled material is never acceptable.

Where migration of moisture vapor would be undesirable (e.g. under living spaces and areas covered by flooring) a "true" under-slab vapor barrier, such as "Stego® Wrap", should be installed. In this case one should consult an expert in waterproofing, our recommendations only apply to the geotechnical aspect of drainage and do not address the prevention of mold or flooring failures.

The top of the membrane should be protected during construction from puncture. .Any punctures in the membrane will defeat its purpose. The contractor is responsible for the method of protecting the

membrane and concrete placement. *Drains and outlets should be provided from the slab drain rock.* (See attached Drawing for Typical Under-slab Drains)

Cuts and Fills

Unsupported cuts and fills are generally not recommended for this site. Fills behind retaining walls should be of material approved by the geotechnical engineer and compacted to a maximum dry density of 90 percent as determined by ASTM D-1157. Fills underlying pavements shall have the top 12 inches compacted to 95 percent maximum dry density.

Geotechnical Drainage Considerations

These recommendations apply to the geotechnical aspect of the drainage as they affect the stability of the construction and land. They do not include site grading and area drainage, which is within the design responsibility of civil engineers and landscape professionals. The civil and landscape professionals should make every effort to comply with the Marin County "Stormwater Quality Manual for Development Projects In Marin County" by the Marin County Stormwater Pollution Prevention Program (MCSTOPPP www.mcstoppp.org) and Bay area Stormwater Management Agencies Association (BASMAA www.basmaa.org) when possible.

The site should be graded to provide positive drainage away from the foundations at a rate of 5 percent within the first ten feet (per requirements of the CBC section1804.3). All roofs should be equipped with gutters and downspouts that discharge into a solid drainage line. Gutters may be eliminated if roof runoff is collected by shallow surface ditches or other acceptable landscape grading. All driveways and flat areas should drain into controlled collection points and all foundation and retaining walls constructed with backdrainage systems. Surface drainage systems, e.g. roofs, ditches and drop inlets *must be maintained separately* from foundation and backdrainage systems. The two systems may be joined into one pipe at a drop-inlet that is a minimum of two feet in elevation below the invert of the lowest back or slab drainage system. A bentonite seal should be placed at the transition point between drainpipes and solid pipes.

One should observe the ponding of water during winter and consult with you landscape professional for the location of surface drains and with us if subdrains are required.

All drop inlets that collect water contaminated with hydrocarbons (e.g. driveways) should be filtered before discharged in to a natural drainage.

All cross slope foundations should have backdrainage. In compliance with section 1805.4.2 of the CBC foundation drains should be installed around the perimeter of the foundation. On sloping lots only the upslope foundation line requires a perimeter drain. Interior and downslope grade beams and foundation lines should be provided with weep holes to allow any accumulated water to pass through the foundation. The top of the drainage pipe should be a minimum of four inches below the adjacent interior grade and constructed in accordance with the attached Typical Drainage Details. All drainpipes should rest on the bottom of the trench or footing with no gravel underneath. Drain pipes with holes greater than ⅛-inch should be wrapped with filter fabric, if Class 2 Permeable is used, to prevent piping of the fines into the pipe. If drain rock, other than Class 2 Permeable, is used the entire trench should be wrapped with filter fabric to prevent the large pore spaces in the drain rock

from silting up. On hillside lots it may not be possible to eliminate all moisture from the substructure area and some moisture is acceptable in a well-ventilated area. Site conditions change due to natural (e.g. rodent activity) and man related actions and during years of below average rainfall, future ground water problems may not be evident. One should expect to see changes in ground water conditions in the future that will require corrective actions.

All surface and ground water collected by drains or ditches should be dispersed across the property into a natural drainage below the structure. The upslope property owner is always responsible to the adjacent lower property owner for water, collected or natural, which may have a physical effect on their property.

All laterals carrying water to a discharge point should be SDR 35, Schedule 40 or 3000 triple wall HDPE pipe, depending on the application and should be buried. 'Flex pipe' is never acceptable. Cleanouts for stormwater drains should be installed in accordance with §1101.12 of the CPC, without pressure testing. However, this is not a geotechnical consideration and is the responsibility of the drainage contractor.

Retaining walls, cut and fill slopes should be graded to prevent water from running down the face of the slope. Diverted water should be collected in a lined "V" ditch or drop inlet leading to a solid pipe.

If the crawl space area is excavated below the outside site grade for joist clearance, the crawl space will act as a sump and collect water. If such construction is planned, the building design must provide for *gravity or pumped drainage from the crawl space.* If it is a concern that moisture vapor from the crawl space will affect flooring, a specialist in vapor barriers should be consulted, we only design drainage for geotechnical considerations.

The owner is responsible for periodic maintenance to prevent and eliminate standing water that may lead to such problems as dry rot and mold.

Construction grading will expose weak soil and rock that will be susceptible to erosion. Erosion protection measures must be implemented during and after construction. These would include jute netting, hydromulch, silt barriers and stabilized entrances established during construction. Typically fiber rolls are installed along the contour below the work area. Refer to the current ABAG[9] manual for detailed specifications and applications. Erosion control products are available from Water Components in San Rafael. The ground should not be disturbed outside the immediate construction area. Prevention of erosion is emphasized over containment of silt. Post construction erosion control is the responsibility of your landscape professional. ***It is the owner's responsibility*** that the contractor knows of and complies with the BMP's (Best Management Practices) of the Regional Water Quality Control Board, available at www.swrcb.ca.gov, ↵ water quality ↵ stormwater ↵ construction. In addition, summer construction may create considerable dust that should be controlled by the judicial application of water spray. After construction, erosion resistant vegetation must be established on all slopes to reduce sloughing and erosion this is the responsibility of a landscape professional. Periodic land maintenance should be performed to clean and maintain all drains and repair any sloughing or erosion before it becomes a major problem.

Drainage Checklist

Before submitting the project drawings to us for review the architect and structural engineer should be sure the following applicable drainage items are shown on the drawings:

- Under-slab drains and outlets
- Crawl space drainage
- Cross-slope footing and grade beam weep holes
- Retaining wall backdrainage pipes with no gravel under the pipes
- Top of retaining wall heel sloped towards rear at ⅛ - inch per foot
- Drain pipe located at lowest part of footing
- Invert of foundation drains located 4-inches below interior grade
- No gravel under any drainpipe
- Upslope exterior foundation drains
- Drains installed in accordance with §1101.12 of the CPC
- Bentonite seals at drainpipe transition to solid pipe
- Proper installation of the drainage panels
- Outfall details and location
- Subdrains under any fill slopes

In lieu of the above details actually being shown on the drawings there may be a:

- ***Note on the structural drawings***: "Drainage details may be schematic and incomplete, refer to the text and drawings in the geotechnical report for actual materials and installation"

Construction Inspections

In order to assure that the construction work is performed in accordance with the recommendations in this report, SalemHowes Associates Inc. must perform the following applicable inspections. We will provide a full time project engineer to supervise the foundation excavation, drainage, compaction and other geotechnical concerns during construction. Otherwise, if directed by the Owner, these inspections will be performed on an "as requested basis" by the Owner or Owner's representative. We will not be responsible for construction we were not called to inspect. In this case it is the responsibility of the Owner to assure that we are notified in a timely manner to observe and accept each individual phase of the project.

Key Inspection Points

- Map excavations in progress to identify and record rock/soil conditions.
- Observe tieback placement and proof loading, including lift off measurement.
- Observe and accept pier drilling and final depth and conditions of all pier holes. We must be on site at the start of drilling the first hole.
- Accept final footing grade prior to placement of reinforcing steel.
- Accept subdrainage prior to backfilling with drainage rock.
- Accept drainage discharge location.

Additional Engineering Services

We should work closely with your project engineer and architect to interactively review the site grading plan and foundation design for conformance with the intent of these recommendations. We should provide periodic engineering inspections and testing, as outlined in this report, during the

construction and upon completion to assure contractor compliance and provide a final report summarizing the work and design changes, if any.

Any engineering or inspection work beyond the scope of this report would be performed at your request and at our standard fee schedule.

Limitations on the Use of This Report

This report is prepared for the exclusive use of Paul Thompson dba West Bay Builders and their design professionals for construction of the proposed new residence. This is a copyrighted document and the unauthorized copying and distribution is expressively prohibited. Our services consist of professional opinions, conclusions and recommendations developed by a Geotechnical Engineer and Engineering Geologist in accordance with generally accepted principles and practices established in this area at this time. This warranty is in lieu of all other warranties, either expressed or implied.

All conclusions and recommendations in this report are contingent upon SalemHowes Associates being retained to review the geotechnical portion of the final grading and foundation plans prior to construction. The analysis and recommendations contained in this report are preliminary and based on the data obtained from the referenced subsurface explorations. The borings indicate subsurface conditions only at the specific locations and times, and only to the depths penetrated. They do not necessarily reflect strata variations that may exist between such locations. The validity of the recommendations is based on part on assumptions about the stratigraphy made by the geotechnical engineer or geologist. Such assumptions may be confirmed only during earth work and foundation construction for deep foundations. If subsurface conditions different from those described in this report are noted during construction, recommendations in this report must be re-evaluated. It is advised that SalemHowes Associates Inc. be retained to observe and accept earthwork construction in order to help confirm that our assumptions and preliminary recommendations are valid or to modify them accordingly. SalemHowes Associates Inc. cannot assume responsibility or liability for the adequacy of recommendations if we do not observe construction.

In preparation of this report it is assumed that the client will utilize the services of other licensed design professionals such as surveyors, architects and civil engineers, and will hire licensed contractors with the appropriate experience and license for the site grading and construction.

We judge that construction in accordance with the recommendations in this report will be stable and that the risk of future instability is within the range generally accepted for construction on hillsides in the Marin County area. However, one must realize there is an inherent risk of instability associated with all hillside construction and, therefore, we are unable to guarantee the stability of any hillside construction. For houses constructed on hillsides we recommend that one investigate the economic issues of earthquake insurance.

In the event that any changes in the nature, design, or location of the facilities are made, the conclusions and recommendations contained in this report should not be considered valid unless the changes are reviewed and conclusions of this report modified or verified in writing by SalemHowes Associates Inc. We are not responsible for any claims, damages, or liability associated with interpretations of subsurface data or reuse of the subsurface data or engineering analysis without

expressed written authorization of SalemHowes Associates Inc. Ground conditions and standards of practice change; therefore, we should be contacted to update this report if construction has not been started before the next winter.

We trust this provides you with the information required for your evaluation of geotechnical properties of this site. If you have any questions or wish to discuss this further please give us a call.

Prepared by:

SalemHowes Associates, Inc.

A California Corporation

Reviewed by:

E Vincent Howes
Geotechnical Engineer
GE #965 exp. 31 Mar 16

Attachments: Drawing A, Site Plan and Location of Test Borings
Drawing B, Typical Site Sections
Typical Under-slab Drains
Outfall Details
Typical Drain Detail
Typical Retaining Wall Drainage
Logs of Test Pits
Table 1, Capacity of Anchor Rods in Fractured Rock
Plate 1, San Francisco Bay Region Earthquake Probabilities

References:

[1] Rice, Salem J; Smith, Theodore C and Strand, Rudolph G.; Geology for Planning Central and Southeastern Marin County, California, California Divisions of Mines and Geology, 1976 OFR 76-2 SF.

[2] U.S. Geological Survey, Probabilities of Large Earthquakes in the San Francisco Bay Region, 2000 to 2030, Open-File Report 99-517, 1999

[3] California Department of Conservation, Division of Mines and Geology, Maps of Known Active Fault Near-Source Zones in California and Adjacent Portions of Nevada, February 1988, International conference of Building Officials.

[4] Department of the Navy, Naval Facilities Engineering Command, Soil Mechanics, Design Manual 7.1, 7.2, (NAVFAC DM-7) May 1982,

[5] Uniform Construction Standards, most recent edition, Marin County Building Department

Copyright SalemHowes Associates Inc, 2015, All Rights Reserved

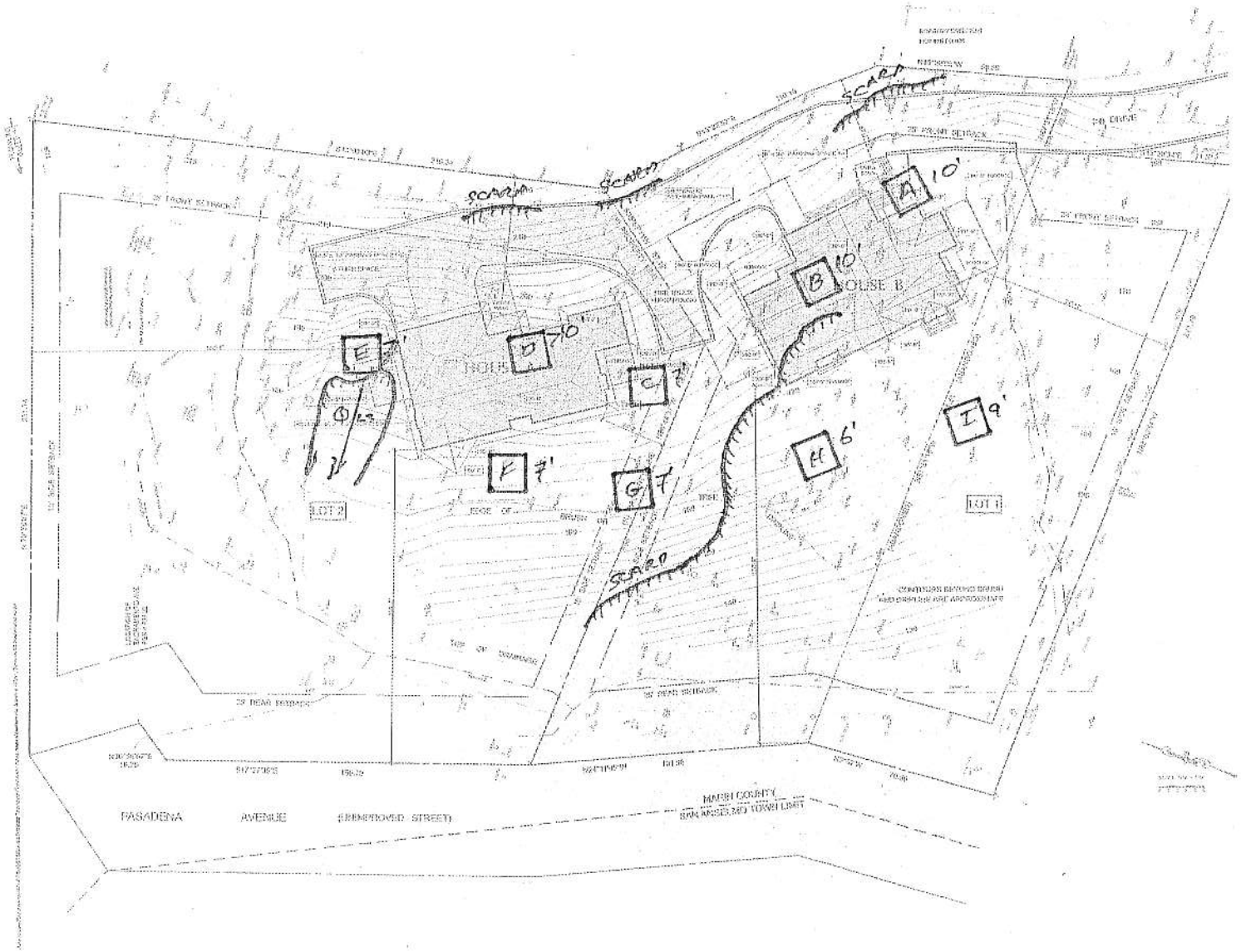

SITE PLAN AND LOCATION OF TEST PITS

A

no scale s.a.d.

LEGEND

⊠	Location of Test Pits
(n')	Depth to Top of Bedrock

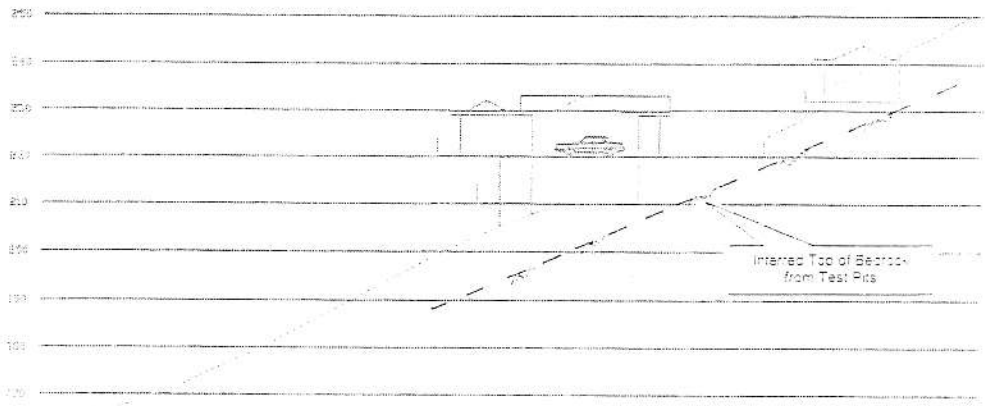

B

TYPICAL SITE SECTION

1"= 10 ' (archtectural section 2)

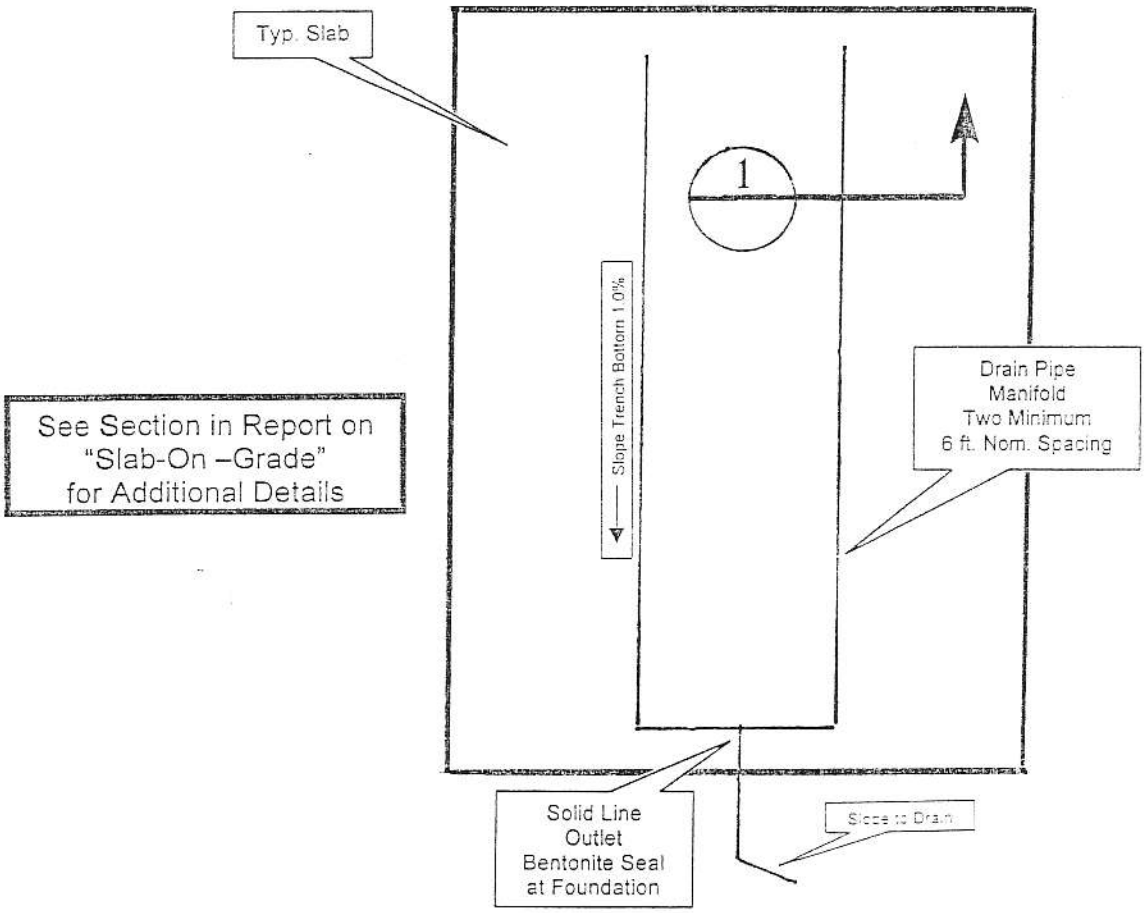

PLAN VIEW

NO SCALE

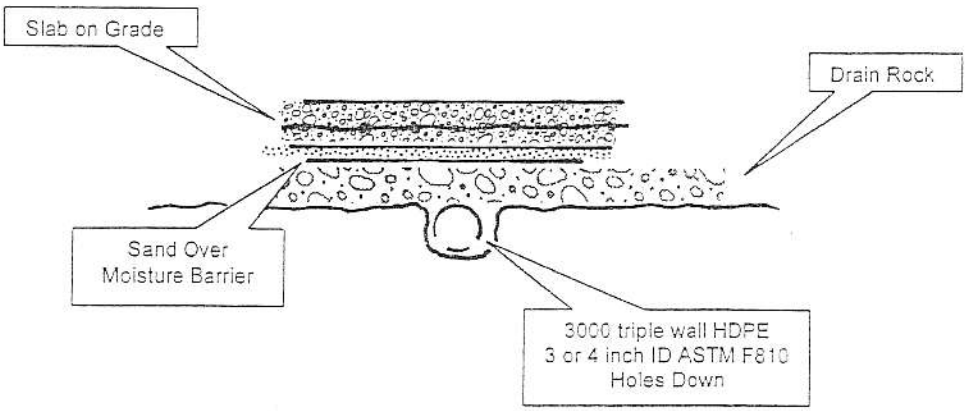

1 Typ. Section Thru Drain Line

No Scale

TYPICAL UNDERSLAB DRAINS

NO SCALE

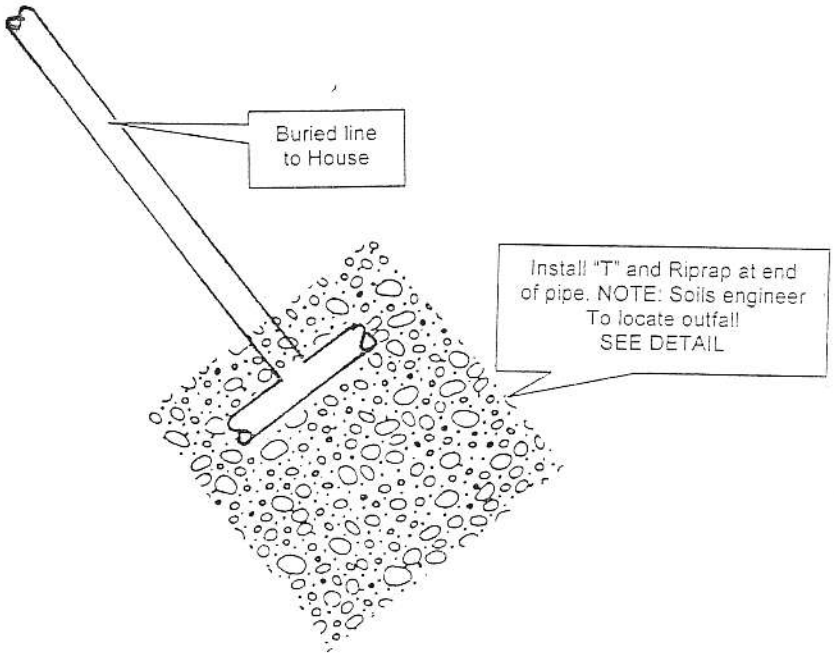

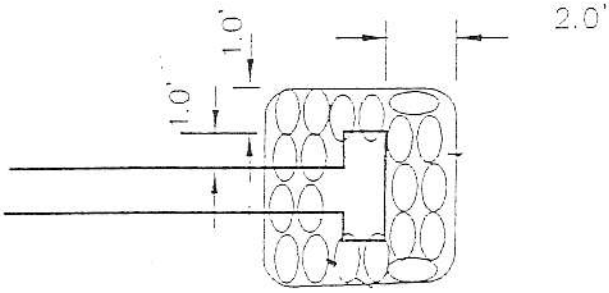

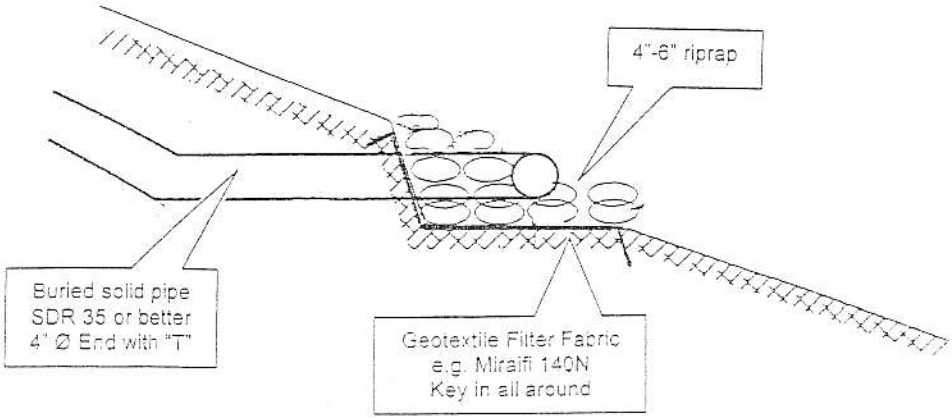

OUTFALL DETAILS

No Scale

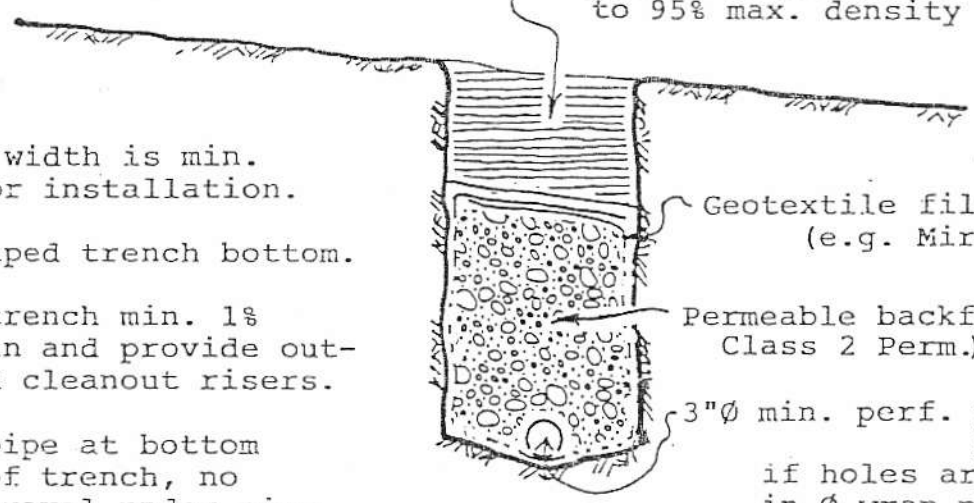

Backfill with impermeable (clay rich) material, minimum 9" thick. Compact to 95% max. density per ASTM D-1557.

Trench width is min. req. for installation.

'U' Shaped trench bottom.

Slope trench min. 1% to drain and provide outlet and cleanout risers.

Note: pipe at bottom of trench, no gravel under pipe. Top of pipe 4" below adjacent interior grade.

Geotextile filter fabric on top. (e.g. Mirafi 140N).

Permeable backfill (e.g. Caltrans Class 2 Perm.) Vibrate into place.

3"Ø min. perf. pipe (See Note) perforations down . if holes are greater than 0.1" in Ø wrap pipe in fabric.

Bentonite clay seal at transition to solid pipe.

NOTE: We recommend rigid drainpipe 3000 triple wall HDPE, 3 or 4 inch ID, ASTM F810.

TYPICAL DRAIN DETAILS

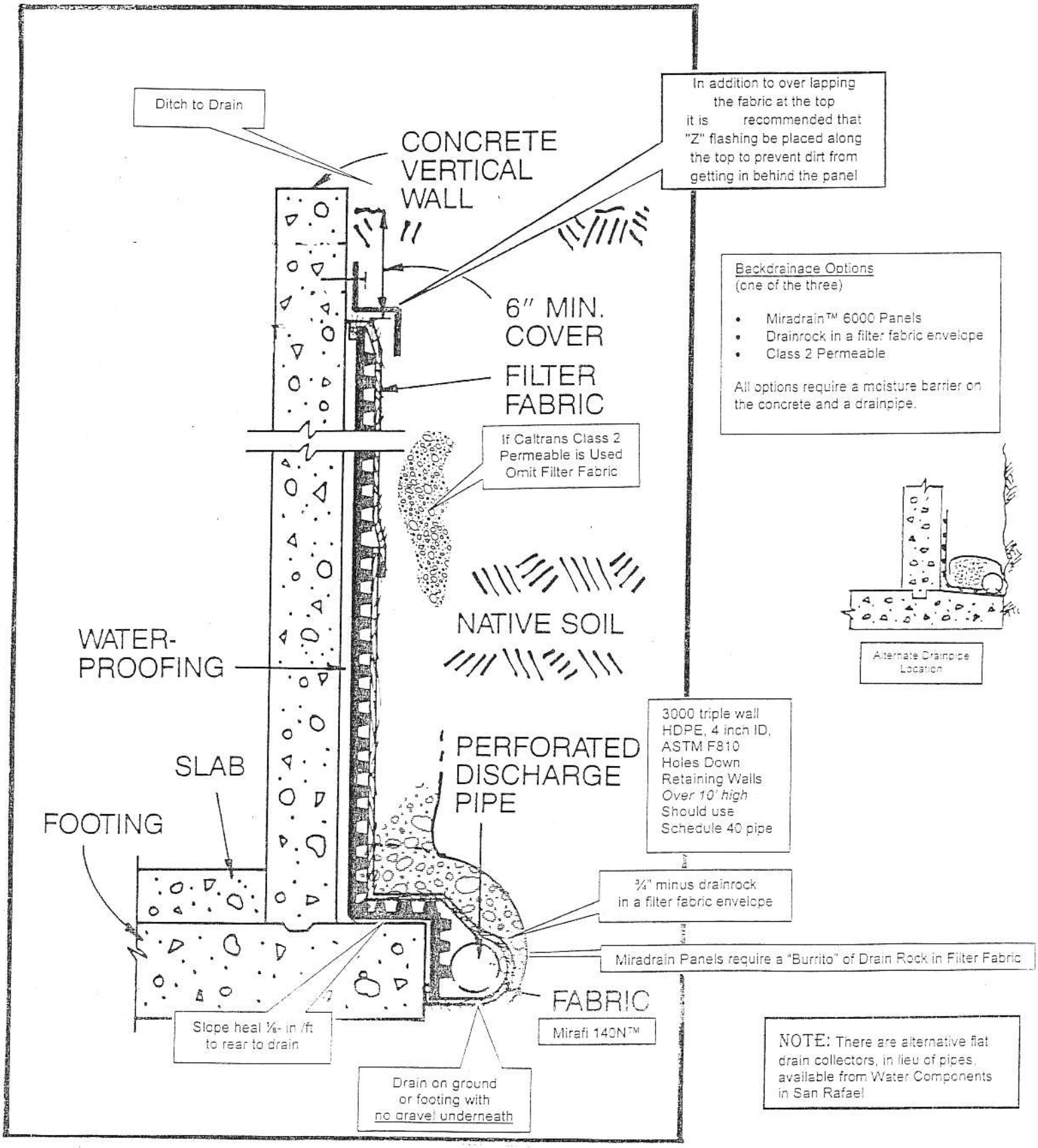

TYPICAL RETAINING WALL DRAINAGE DETAILS

LOGS OF TEST PITS

Test Pit A

0-5.0 ft. **Landslide Debris** [Qls]
Clayey silt [CL-ML] with Metasediment
Cobbles to boulders, slide debris

5.0 **Clay** [CL] grey soft clay LL= 34 PI = 34 γ = 130 Lbs/ft^3

7.0 Δ to highly weathered rock?, tan silty sand [SM]

10.0 **Metasediment Rock** [fm] bedrock, highly weathered
friable and sheared

Total Depth of Pit 14.0 feet

Test Pit B

0-2.0 ft. **Colluvium** [Qc]
Clayey silt [CL-ML]

2.0 **Colluvium** [Qc]
Silt [ML] tan hard

4.0 **Metasediment** [fm]
Highly weathered and sheared, look like
ancient Qls deposit or tectonicly sheared
rock.

10.0 **Metasediment Rock** [fm] hard bedrock

Total Depth of Pit 12.0 feet

Test Pit C

0-2.0 ft. **Topsoil** [ML], grey soft with organics

2.0 **Residual Soil** silt [ML] hard with rock testure,
becoming harder with depth

4.0 **Metasediment Rock** [fm] bedrock, sheared with soft zones
surrounding hard enclosures

7.0 definitely in place bedrock, hard enclousures in
sheared matrix, typical fm.

10.0 backhoe refusal in hard rock

Total Depth of Pit 10.0 feet

Test Pit D

0-2.0 ft. **Topsoil and Colluvium** [ML & Qc]
grey clayey silt with large meta sandstone cobbles

2.0 Δ to hard tan silt [ML]

4.0 Δ to **Landslide Debris** [Qls] hard tan silt with rock fragments
and cobbles, old slide debris
silt and internal shearing LL= 40 PI = 10 γ = 135 Lbs/ft^{3}g

Same to 10 feet

10.0 backhoe refusal in slide debris

Total Depth of Pit 10.0 feet

Test Pit E

0-5.0 ft. **Colluvium** or **Landslide Debris** [Qc or Qls]
silt [ML] tan hard with gravel to cobbles of metasandstone.

5.0 **Residual Soil**, silty clay [ML-CL] with sheared rock texture

6.0 **Metasandstone** [fm] hard sheared metasandstone bedrock

Harder with depth

10.0 Backhoe refusal in hard rock

Total Depth of Test Pit 10.0 feet

Test Pit F

0-1.5 ft. **Topsoil**, grey silt [ML] with angular cobbles and organics

1.5-7.0 **Colluvium or Landslide Debris** [Qc or Qls]
Tan hard silt [ML] matrix with angular metasandstone cobbles

7.0-9.0 **Metasandstone** [fm] tan highly sheared bedrock

9.0-11.0 Δ to tan soft massive metasandstone

11-12.0 Δ to highly sheared metasandstone bedrock

Total Depth of Test Pit 12.0 Feet

Test Pit G

0-1.5 ft. **Topsoil**, grey silt [ML] with angular cobbles and organics

1.5-6.0 **Colluvium or Landslide Debris** [Qc or Qls]
Tan hard silt [ML] matrix with angular metasandstone cobbles

6.0 **Metasandstone** [fm] grey highly weathered and sheared bedrock

8.0 interbedded sandstone and shale

Total depth of Test Pit 10.0

Test Pit H

0-4.0 **Landslide Debris** [Qls] grey silt [ML] with angular rock Fragments

4-6.0 **Residual Soil** tan with grey silty clay [ML-CL] mottling
LL= 40 PI = 15 γ = 130 Lbs/ft^3

6.0 Δ metasandstone/shale bedrock, highly internally sheared

Total depth of Test Pit 10.0

Test Pit I

0-1.0 ft **Top Soil** [ML] grey silt with organica

1-6.0 **Landslide Debris** [Qls] grey silty clay [CL-ML] with angular rock fragments

6.0 Bottom of landslide
6.0 **Residual Soil** tan clayey silt [ML-CL] with faint rock texture
7.0 Δ to tan silty sand

9.0 **Metasandstone**, weathered bedrock, tan soft rock hardness

10.0 Turning hard.

Total depth of Test Pit 10.0

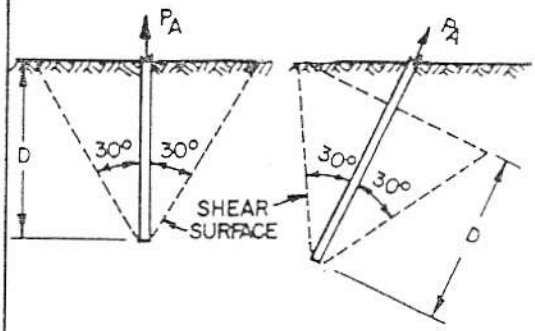

SINGLE BAR ANCHORAGES

P_A = ALLOWABLE ANCHOR PULL

D = EMBEDMENT DEPTH, MEASURED AS SHOWN

C_{all} = ALLOWABLE ROCK SHEAR STRESS

f_s = ALLOWABLE BAR STRESS, $0.66\, f_y$

b_{rqd} = BOND STRESS ON BAR PERIMETER REQUIRED TO DEVELOP C_{all}

A = BAR CROSS-SECTION AREA

$P_A = (2.1)\, D^2 (C_{all})$ AND $P_A = A\, f_s$

$$b_{rqd} = \frac{P_A}{\text{BAR PERIMETER} \times D}$$

TESTS INDICATE THAT FOR BAR IN ORDINARY FRACTURED ROCK NEAR THE SURFACE:

MINIMUM D(FT) = $(1.25)\sqrt{P_A}$ (KIPS)

AT THIS DEPTH C_{all} = 0.3 KSF AND SHOULD NOT BE TAKEN GREATER THAN THIS VALUE WITHOUT PULLOUT TESTS

SPACING OF BARS IN PLAN SHOULD EXCEED 1.2D

EXAMPLE:

GIVEN: P_A = 20K FOR 1 IN. SQUARE BAR

MINIMUM D = $1.25\sqrt{20}$ = 5.6 FT.

BAR SPACING = 1.2 (5.6) = 6.7 FT.

$$b_{rqd} = \frac{20{,}000}{4(5.6)(12)} = 74 \text{ PSI}$$

Not to exceed 100 psi.

(*) Minimum depth for any application is 6 feet, as measured above.

PLAN

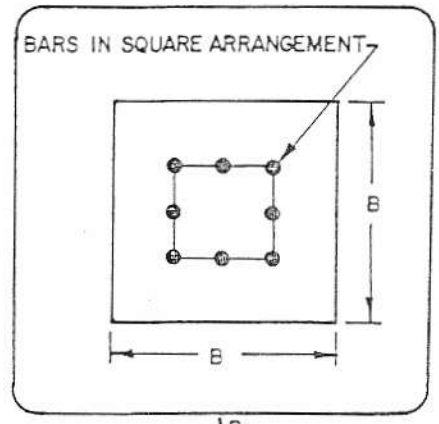

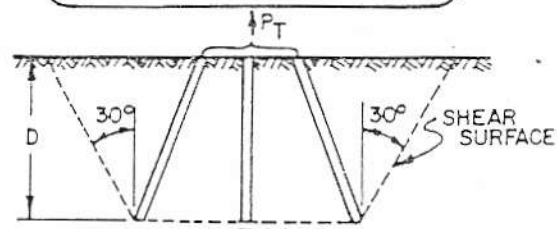

SECTION

BAR GROUP ANCHORAGE

P_T = ALLOWABLE ANCHOR PULL FOR GROUP OF BARS.

N = NUMBER OF BARS IN SQUARE ARRANGEMENT

$P_T = 4.6D(B + 0.58D)\, C_{all}$ AND

$P_T = NA\, f_s$

$$b_{rqd} = \frac{P_T}{\text{BAR PERIMETER} \times ND}$$

TESTS INDICATE THAT FOR BAR GROUP IN ORDINARY FRACTURED ROCK NEAR THE SURFACE:

MINIMUM D(FT)

$$D = \frac{-4.6\, B\, C_{all} + \sqrt{21.2\, B^2 (C_{all})^2 + 10.7\, C_{all} \times NAf_s}}{5.34\, C_{all}}$$

AT THIS DEPTH C_{all} = 0.3 KSF AND SHOULD NOT BE TAKEN GREATER THAN THIS VALUE WITHOUT PULLOUT TESTS

EXAMPLE:

GIVEN P_T = 80K, USE 4 – 1 IN SQUARE BARS

B = 4.5 FT f_s = 20 KSI

MIN. D: WITHOUT TESTS:

$$D = \frac{-4.6 \times 4.5 \times 0.3 + \sqrt{21.2 \times 4.5^2 \times 0.3^2 + 10.7 \times 0.3 \times 4 \times 1 \times 20.0}}{5.34 \times 0.3}$$

= 6.9 FT

$$b_{rqd} = \frac{80{,}000}{(4)(4)(6.9)(12)} = 60 \text{ PSI}$$

Capacity of Anchor Rods in Fractured Rock

Table 1

From: Department of the Navy, Naval Facilities Engineering Command, Soil Mechanics, Design Manual 7.2, (NAVFAC DM-7) May 1982, Pg 170 Figure 16.

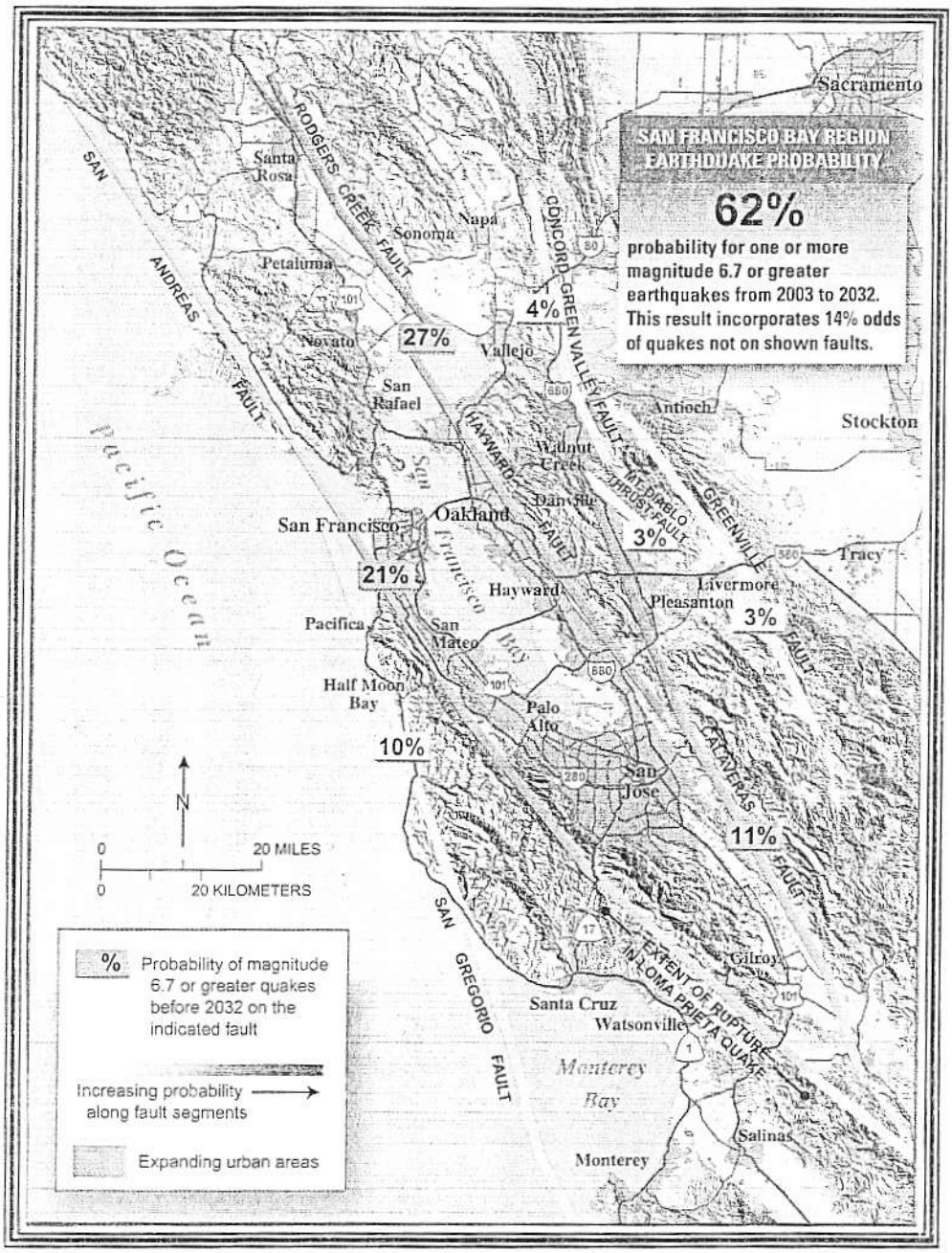

Using newly collected data and evolving theories of earthquake occurrence, U.S. Geological Survey (USGS) and other scientists have concluded that there is a 62% probability of at least one magnitude 6.7 or greater quake, capable of causing widespread damage, striking somewhere in the San Francisco Bay region before 2032. A major quake can occur in any part of this densely populated region. Therefore, there is an ongoing need for all communities in the Bay region to continue preparing for the quakes that will strike in the future.

Plate 1, San Francisco Bay Region Earthquake Probabilities

From: USGS Fact Sheet 039-03
Revised September 2004