GENERAL NOTES:

1. PROJECT TO CONFORM WITH 2019 CALIFORNIA BUILDING, RESIDENTIAL, ELECTRICAL, GREEN, MECHANICAL & PLUMBING, & ENERGY CODE, AS ADOPTED BY THE CITY & ALL APPLICABLE STATE AND LOCAL CODES.

2. DRAWINGS INDICATE GENERAL AND TYPICAL DETAILS OF CONSTRUCTION. SIMILAR CONDITIONS SHALL BE BUILT IN ACCORDANCE WITH THE INFORMATION SHOWN. SUBJECT TO THE ARCHITECT'S APPROVAL THE CONTRACTOR SHALL NOTIFY THE ARCHITECT OF ALL CONFLICTING OR MISSING INFORMATION PRIOR TO COMMENCING WORK.

3. THE CONTRACTOR SHALL VERIFY ALL DIMENSIONS, LOCATIONS OF EMBEDDED ITEMS, ETC. PRIOR TO COMMENCING WORK. SHOULD ANY CONDITIONS EXIST OR RESULT DURING CONSTRUCTION WHICH DIFFER FROM THOSE DETAILED ON THE ARCHITECTURAL DRAWINGS. THE ARCHITECT SHALL BE NOTIFIED IMMEDIATELY.

4. DIMENSIONS AS INDICATED ARE DIMENSIONS TO BE USED. DO NOT SCALE THE DRAWING.

5. THE CONTRACTOR SHALL BE SOLELY RESPONSIBLE FOR THE DETERMINATION AND EXECUTION OF THE METHODS OF CONSTRUCTION. INCLUDING ALL TEMPORARY CONDITIONS AND SUPPORTS. SITE VISIT THE ARCHITECT WILL NOT INCLUDE INSPECTION OF METHODS OF CONSTRUCTION OR SAFETY MEASURES.

6. THE CONTRACTOR SHALL BE SOLELY RESPONSIBLE FOR THE PROTECTION OF ADJACENT PROPERTIES, STRUCTURES, STREETS, AND UTILITIES.

7. STRUCTURAL OBSERVATION SHALL BE REQUIRED BY THE PROJECT ENGINEER FOR CONFORMANCE TO THE APPROVED PLANS.

   THE CONTRACTOR SHALL GIVE THE ARCHITECT & ENGINEERS SUFFICIENT NOTICE (48 HOURS MIN.) FOR ON-SITE CONSTRUCTION REVIEW OF AT LEAST THE FOLLOWING:

   A. FOUNDATION EXCAVATION AND GRADING.
   B. REINFORCING CONCRETE PRIOR TO PLACEMENT OF CONCRETE.
   C. STRUCTURAL FRAMING, ROUGH-IN ELECTRICAL, PLUMBING AND MECHANICAL.
   D. SHEET ROCK NAILING.
   E. INSPECTION OF FINISHES.

THESE PLANS ARE THE PROPERTY OF ONJU UPDEGRAVE, ARCHITECT AND ARE NOT TO BE USED IN WHOLE OR IN PART FOR ANY WORK OTHER THAN THE LOCATION SHOWN HERE ON.

ABBREVIATION INDEX

A.P.N.	Assessor's Parcel Number	LAU.	Laundry
APPROX.	Approximate	MEMB	Membrane
A.B.	Anchor Bolt	MAX.	Maximum
ABV	Above	MIN.	Minimum
A.D.	Area Drain	M.B.	Machine Bolt
BD	Board	MECH.	Mechanical
BLK'G	Blocking	MISC.	Miscellaneous
BLDG.	Building	M.O.	Masonry Opening
BM	Beam	(N)	New
BOT.	Bottom	NFVA	Net Free Vent Area
BT	Between	N.I.C.	Not In Contract
C.B.	Catch Basin	N.T.S.	Not To Scale
CLG.	Ceiling	O.C.	On Center
CLO.	Closet	O /	Over
CLR.	Clear	O.D.	Outside Diameter
CMU	Concrete Masonary Unit	P.E.N.	Plywood Edge Nail
COL	Column	PL.	Plate
CONC.	Concrete	PLYWD.	Plywood
CONT.	Continuous	PT.	Point
DF	Douglas Fir	PTDF	Pressure Treated Douglas Fir
D.F.	Drinking Fountain	R	Riser
DBL.	Double	R.D.	Roof Drain
DIA	Diameter	REF.	Reference
DN.	Down	REFR.	Refrigerator
DR.	Door	REQ.	Required
DS.	Downspout	REINF.	Reinforced
(E)	Existing	RWD.	Redwood
EA.	Each	RM.	Room
EL.	Elevator	RWL	Rain Water Leader
ELEC	Electrical	S.C.	Solid Core
ELEV	Elevation	SHT'G	Sheathing
E.P.	Electrical Panel	SLD	Sliding
EQ.	Equal	STD	Standard
EXT.	Exterior	SIM.	Similar
E.W.	Each Way	SPEC.	Specification
FD	Floor Drain	S.ST.	Stainless Steel
F.E.	Fire Extinguisher	STL.	Steel
F.F.	Finish Floor	STOR.	Storage
FIN.	Finish	STRUC.	Structure
FL.	Floor	T	Tread
FLASH	Flashing	T.B.	Towel Bar
FND	Foundation	T & B	Top And Bottom
F.O.	Finish Opening	T.C.	Top Of Curb
F.O.H.C.	Free Of Heart Center	TEL.	Telephone
F.O.F.	Face OF Finish	T.O.	Top of
F.O.S.	Face Of Stud	T.O.P.	Top of Plate
FTG.	Footing	T.O.W.	Top of Wall
GAL	Gallon	T & G	Tongue And Groove
G.S.M.	Galvanized Sheet Metal	TYP.	Typical
GYP.	Gypsum	U.O.N.	Unless Otherwise Noted
H.B.	Hose Bib	V.I.F.	Verify in Field
HDWD.	Hardwood	W/	With
HDWE.	Hardware	W.C.	Watercloset
INSUL	Insulation	W/O	Without
K.D.	Kiln Dried	W.P.	Waterproofing
		WUI	Wildland Urban Interface

Marin County Stormwater Pollution Prevention Program

Minimum Control Measures
For Small Construction Projects

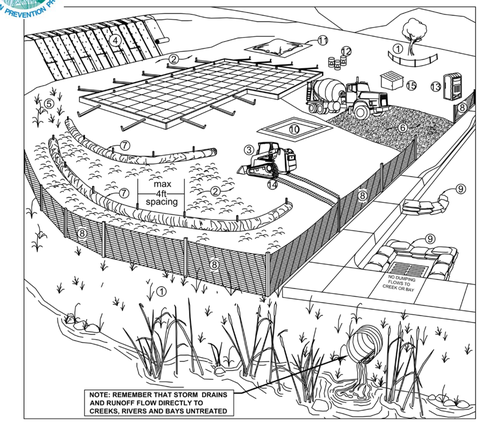

Erosion Controls	Sediment Controls	Good Housekeeping
NS Scheduling	6. Tracking Controls	10. Concrete Washout
1. Preserve Vegetation & Creek Set Backs	7. Fiber Rolls	11. Stockpile Management
2. Soil Cover	8. Silt Fence	12. Hazardous Material Management
3. Soil Preparation/ Roughening	9. Drain Inlet Protection	13. Sanitary Waste Management
4. Erosion Control Blankets	NS Trench Dewatering	14. Equipment and Vehicle Maintenance
5. Revegetation		15. Litter and Waste Management

NS=not shown on graphic

Note: Select an **effective combination of control measures from each category**, Erosion Control, Sediment Control, and Good Housekeeping. Control measures shall be **continually implemented and maintained throughout the project** until activities are complete, disturbed areas are stabilized with permanent erosion controls, and the local agency has signed off on permits that may have been required for the project. **Inspect and maintain the control measures** before and after rain events, and as required by the local agency or state permit.
More detailed information on the BMPs can be found in the related California Stormwater Quality Association (CASQA) and California Department of Transportation (Caltrans) BMP Factsheets. CASQA factsheets are available by subscription in the *California Best Management Practices Handbook Portal: Construction* at http://www.casqa.org. Caltrans factsheets are available in the *Construction Site BMP Manual March 2003* at http://www.dot.ca.gov/hq/construc/stormwater/manuals.htm.
Visit www.mcstoppp.org for more information on construction site management and Erosion and Sediment Control Plans.

Control Measure		General Description
Erosion Control Best Management Practices		
N/A	Scheduling	Plan the project and develop a schedule showing each phase of construction. Schedule construction activities to reduce erosion potential, such as scheduling ground disturbing activities during the summer and phasing projects to minimize the amount of area disturbed. *For more info see the following factsheets: CASQA: EC-1; or Caltrans: SS-1.*
1	Preserve Existing Vegetation and Creek Setbacks	Preserve existing vegetation to the extent possible, especially along creek buffers. Show creek buffers on maps and identify areas to be preserved in the field with temporary fencing. Check with the local Planning and Public Works Departments for specific creek set back requirements. *For more info see the following factsheets: CASQA: EC-2; or Caltrans: SS-2.*
2	Soil Cover	Cover exposed soil with straw mulch and tackifier (or equivalent). *For more info see the following factsheets: CASQA: EC-3, EC-5, EC-6, EC-7, EC-8, EC-14, EC-16; or Caltrans: SS-2, SS-4, SS-5, SS-6, SS-7, SS-8.*
3	Soil Preparation/ Roughening	Soil preparation is essential to vegetation establishment and BMP installation. It includes soil testing and amendments to promote vegetation growth as well as roughening surface soils by mechanical methods (decompacting, scarifying, stair stepping, etc.). *For more info see the following factsheets: CASQA: EC-15.*
4	Erosion Control Blankets	Install erosion control blankets (or equivalent) on disturbed sites with 3:1 slopes or steeper. Use wildlife-friendly blankets made of biodegradable natural materials. Avoid using blankets made with plastic netting or fixed aperture netting. See: http://www.coastal.ca.gov/nps/Wildlife-Friendly_Products.pdf. *For more info see the following factsheets: CASQA: EC-7; or Caltrans: SS-7.*
5	Revegetation	Re-vegetate areas of disturbed soil or vegetation as soon as practical. *For more info see the following factsheets: CASQA: EC-4; or Caltrans: SS-4.*
Sediment Control Best Management Practices		
6	Tracking Controls	Stabilize site entrance to prevent tracking soil offsite. Inspect streets daily and sweep street as needed. Require vehicles and workers to use stabilized entrance. Place crushed rock 12-inches deep over a geotextile, using angular rock between 4 and 6-in. Make the entrance as long as can be accommodated on the site, ideally long enough for 2 revolutions of the maximum tire size (16-20 feet long for most light trucks). Make the entrance wide enough to accommodate the largest vehicle that will access the site, ideally 10 feet wide with sufficient radii for turning in and out of the site. Rumble pads or rumble racks can be used in lieu of or in conjunction with rock entrances. Wheel washes may be needed where space is limited or where the site entrance and sweeping is not effective. *For more info see the following factsheets: CASQA: TC-1; TC-3; or Caltrans: TC-1; TC-3.*
7	Fiber Rolls	Use fiber rolls as a perimeter control measure, along contours of slopes, and around soil stockpiles. On slopes space rolls 10 to 20 feet apart (using closer spacing on steeper slopes). Install parallel to contour. If more than one roll is used in a row overlap roll do not abut. J-hook end of roll upslope. Install rolls per either Type 1 (stake rolls into shallow trenches) or Type 2 (stake in front and behind roll and lash with rope). Use wildlife-friendly fiber rolls made of biodegradable natural materials. Avoid using fiber rolls made with plastic netting or fixed aperture netting. See: http://www.coastal.ca.gov/nps/Wildlife-Friendly_Products.pdf. Manufactured linear sediment control or compost socks can be used in lieu of fiber rolls. *For more info see the following factsheets: CASQA: SE-5 (Type 1); SE-12, SE-13; or Caltrans: SC-5 (Type 1 and Type 2).*
8	Silt Fence	Use silt fence as a perimeter control measure, and around soil stockpiles. Install silt fence along contours. Key silt fence into the soil and stake. Do not use silt fence for concentrated water flows. Install fence at least 3 feet back from the slope to allow for sediment storage. Wire backed fence can be used for extra strength. Avoid installing silt fence on slopes because they are hard to maintain. Manufactured linear sediment control can be used in lieu of silt fences. *For more info see the following factsheets: CASQA: SE-1; SE-12; or Caltrans: SC-1.*
9	Drain Inlet Protection	Use gravel bags, (or similar product) around drain inlets located both onsite and in gutter as a last line of defense. Bags should be made of a woven fabric resistant to photo-degradation filled with 0.5-1-in washed crushed rock. Do not use sand bags or silt fence fabric for drain inlet protection. *For more info see the following factsheets: CASQA: SE-10; or. Caltrans: SC-10.*
N/A	Trench Dewatering	Follow MCSTOPPP BMPs for trench dewatering. http://www.marincounty.org/depts/pw/divisions/mcstoppp/development/~/media/Files/Departments/PW/mcstoppp/development/TrenchingSWReqMCSTOPPPFinal6_09.pdf. *For more info see the following factsheets: CASQA: NS-2; or Caltrans: NS-2.*
Good Housekeeping Best Management Practices		
10	Concrete Washout	Construct a lined concrete washout site away from storm drains, waterbodies, or other drainages. Ideally, place adjacent to stabilized entrance. Clean as needed and remove at end of project. *For more info see the following factsheets: CASQA: WM-8; or .Caltrans: WM-8.*
11	Stockpile Management	Cover all stockpiles and landscape material and berm properly with fiber rolls or sand bags. Keep behind the site perimeter control and away from waterbodies. *For more info see the following factsheets: CASQA: WM-3 or Caltrans: WM-3.*
12	Hazardous Material Management	Hazardous materials must be kept in closed containers that are covered and within secondary containment; do not place containers directly on soil. *For more info see the following factsheets: CASQA: WM-6; or Caltrans: WM-6.*
13	Sanitary Waste Management	Place portable toilets near stabilized site entrance, behind the curb and away from gutters, storm drain inlets, and waterbodies. Tie or stake portable toilets to prevent tipping and equip units with overflow pan/tray (most vendors provide these). *For more info see the following factsheets: CASQA: WM-9; or Caltrans: WM-9.*
14	Equipment and Vehicle Maintenance	Prevent equipment fluid leaks onto ground by placing drip pans or plastic tarps under equipment. Immediately clean up any spills or drips. *For more info see the following factsheets: CASQA: NS-8, NS-9, and NS-10; or Caltrans: NS-8, NS-9, and NS-10.*
15	Litter and Waste Management	Designate waste collection areas on site. Use watertight dumpsters and trash cans; inspect for leaks. Cover at the end of each work day and when it is raining or windy. Arrange for regular waste collection. Pick up site litter daily. *For more info see the following factsheets: CASQA: WM-5; or Caltrans: WM-5.*

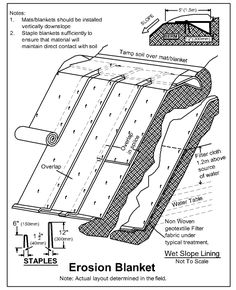

Erosion Blanket
Note: Actual layout determined in the field.

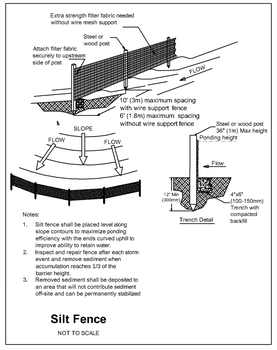

Silt Fence
NOT TO SCALE

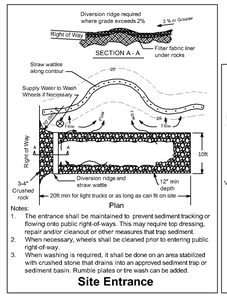

Site Entrance

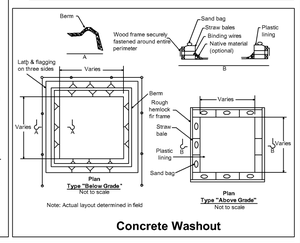

Concrete Washout

Catch Basins with Gravel Bags
(Do not use sand bags near inlets)

PROJECT CONSULTANTS

ARCHITECT	ONJU UPDEGRAVE 990 A STREET, SUITE 202 SAN RAFAEL, CA 94901 PHONE: 415-457-7788 FAX: 415-457-7747 EMAIL: onju@onju.net
LANDSCAPE ARCHITECT	IMPRINTS LANDSCAPE ARCHITECTURE 202 ROSEMONT AVE MILL VALLEY, CA 94941 PHONE: 415- 380-0755 EMAIL: brad@imprintsgardens.com
SURVEYOR	DAVID HARP & ASSOCIATES 10 HARBOR VIEW COURT SAN RAFAEL, CA 94901 PHONE: 415-453-7624 EMAIL : harp5290@gmail.com
CIVIL ENGINEER	VIA ATELIER INC VLAD G. IOJICA 9 BROOKSIDE CT SAN ANSELMO, CA 94960 PHONE: 415- 774-6776 EMAIL : vlad@via-eng.com

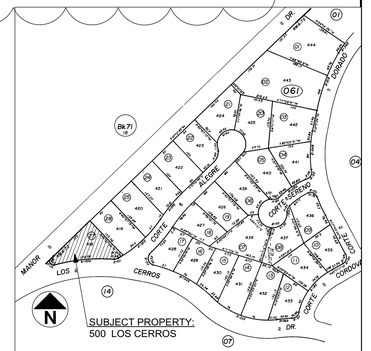

1 VICINITY & PARCEL MAP

PROPERTY Summary - 500 Los Cerros Dr, Greenbrae, CA

APN	070-061-27		
Zoning	R1-B2		
LOT AREA	11,932 Sq. Ft.		
FAR Maximum	30.0%	3580 Sq. Ft.	
	EXISTING (DEMO)	NEW	TOTAL
BUILDING AREA			
Main Floor Residence Area	2398		2398
Upper Floor Residence Area	580		580
Total Residence Area	**2978**	**0**	**2978**
Garage	0	0	0
TOTAL Building Area	**2978**	**0**	**2978**
DECK AREA			**0**
FAR (up to 540sf garage exception)	Percent		Area
Proposed & Existing (no change)	25.0%		2978

PROJECT SCOPE SUMMARY:
1. Build new driveway.
2. Replace existing driveway and yard area with new pool and patio. Includes retaining walls, security fence, and pool equipment in front yard.

DRAWING INDEX

A0	TITLE SHEET, GENERAL NOTES
1	EXISTING TOPOGRAPHIC PLAN
A1.1	SITE PLAN
L1	LANDSCAPE PLAN
A3.1	PROPOSED PLAN
A4.1	PROPOSED ELEVATIONS
C1.01	COVER SHEET
C2.0	EXISITNG CONDITIONS, DEMOLITION
C3.0	EROSION CONTROL PLAN
C3.1	EROSION CONTROL DETAILS
C4.0	GRADING & DRAINAGE PLAN
C5.0	SECTIONS & DETAILS

Onju
ONJU UPDEGRAVE
ARCHITECT
110 DEER HOLLOW RD
SAN ANSELMO , CA 94960
PHONE: 415 . 457 . 7788
FAX: 415 . 457 . 7747
Email: onju@onju.net

TITLE SHEET. NOTES

CHANG RESIDENCE
NEW POOL & DRIVEWAY
500 LOS CERROS DR, GREENBRAE, CA
APN: 070-061-27

REVISIONS	BY
3-17-21 Des Rev	

DATE 11-12-20 Design Rev
SCALE AS NOTED
DRAWN
SHEET
A0

NOTES:

1. All distances and elevations shown are in feet and decimal feet.

2. Spot elevations and 2' contours shown on this map are based on an assumed datum and the assigned elevation of 100.0 on the front entry door threshold.

3. No underground utilities, or irrigation and water supply facilities are shown on this map.

4. This Topographic Map has been prepared for use at the mapping scale of 1"=8' (1:96) based on national mapping standards. We accept no liability for the accuracy of this map if it is enlarged beyond its designed scale.

5. Our "WORK PRODUCT" is the bond print stamped with the California Land Surveyor Seal L.S. 5290 and the original signature of David Harp. As a convenience to the design professional this map was created using AutoCAD and a copy of the AutoCAD drawing file has been delivered for their use.

6. This map was prepared for the exclusive use of Theresa & Howard Chang and/or their legal representatives. Use or reliance on this map by any other party is forbidden without expressed written permission by David Harp, whose seal and signature are shown hereon.

7. Boundary lines shown are based on the Subdivision Map, and found monuments per that recorded map known as 6 RM 72, Marin County Records.

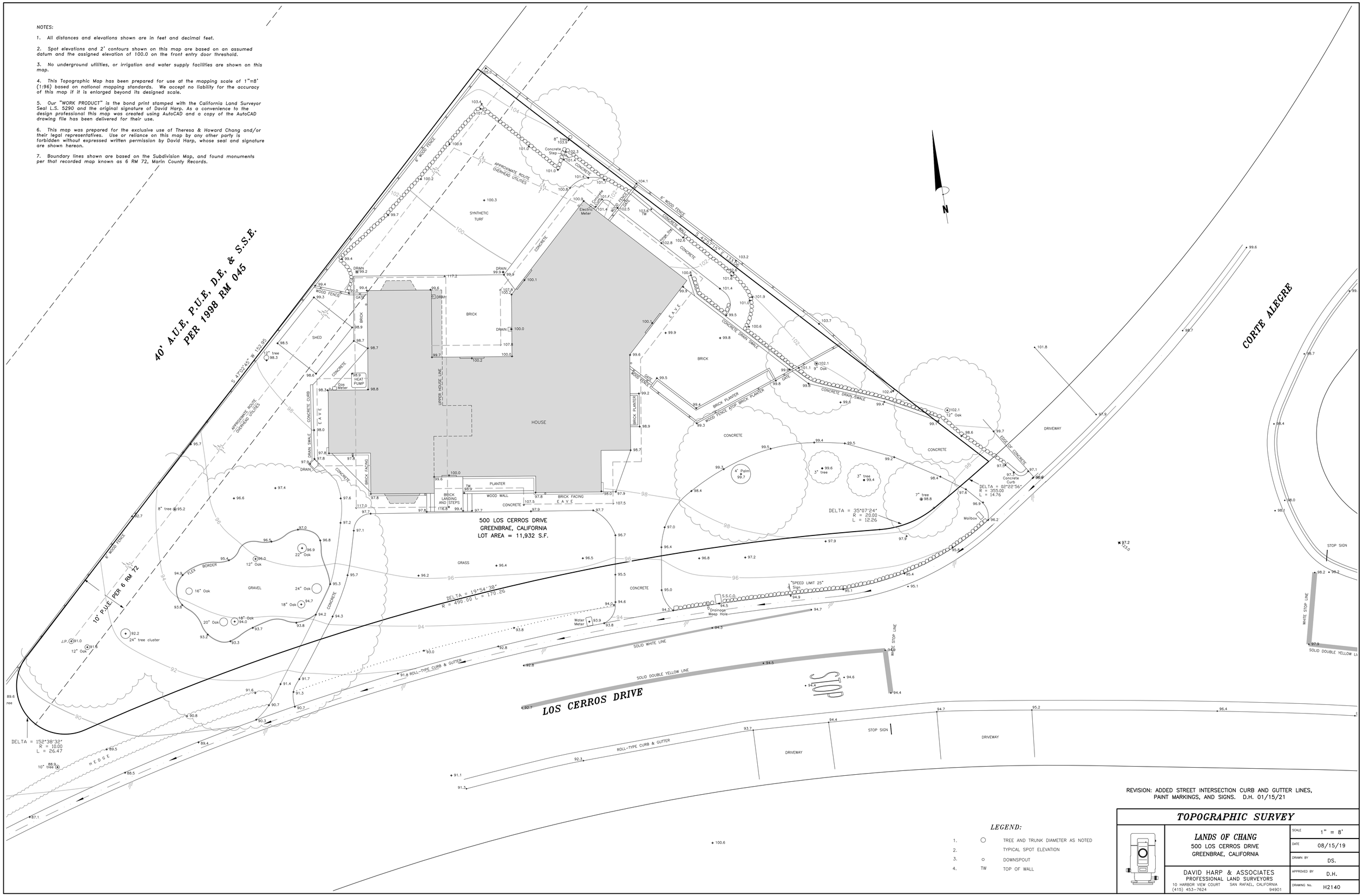

REVISION: ADDED STREET INTERSECTION CURB AND GUTTER LINES, PAINT MARKINGS, AND SIGNS. D.H. 01/15/21

LEGEND:

1. ○ TREE AND TRUNK DIAMETER AS NOTED
2. TYPICAL SPOT ELEVATION
3. ○ DOWNSPOUT
4. TW TOP OF WALL

TOPOGRAPHIC SURVEY

LANDS OF CHANG
500 LOS CERROS DRIVE
GREENBRAE, CALIFORNIA

DAVID HARP & ASSOCIATES
PROFESSIONAL LAND SURVEYORS
10 HARBOR VIEW COURT SAN RAFAEL, CALIFORNIA
(415) 453-7624 94901

SCALE	1" = 8'
DATE	08/15/19
DRAWN BY	DS.
APPROVED BY	D.H.
DRAWING No.	H2140

NOTES:

1. All distances and elevations shown are in feet and decimal feet.

2. Spot elevations and 2' contours shown on this map are based on an assumed datum and the assigned elevation of 100.0 on the front entry door threshold.

3. No underground utilities, or irrigation and water supply facilities are shown on this map.

4. This Topographic Map has been prepared for use at the mapping scale of 1"=8' (1:96) based on national mapping standards. We accept no liability for the accuracy of this map if it is enlarged beyond its designed scale.

5. Our "WORK PRODUCT" is the bond print stamped with the California Land Surveyor Seal L.S. 5290 and the original signature of David Harp. As a convenience to the design professional this map was created using AutoCAD and a copy of the AutoCAD drawing file has been delivered for their use.

6. This map was prepared for the exclusive use of Theresa & Howard Chang and/or their legal representatives. Use or reliance on this map by any other party is forbidden without expressed written permission by David Harp, whose seal and signature are shown hereon.

7. Boundary lines shown are based on the Subdivision Map, and found monuments per that recorded map known as 6 RM 72, Marin County Records.

PROJECT DATA TABLE

1.	**Lot area** *(both the dry land area and the total area must be provided for lots that are partially submerged)*	
	Existing	11,932 SF
	Proposed	11,932 SF
2.	**Building Area**	
	Existing	3,098 SF
	Proposed	3,098 SF
3.	**Floor Area**	
	Existing	2,978 SF
	Proposed	2,978 SF
4.	**Floor Area Ratio**	
	Existing	25%
	Proposed	25%
5.	**Proposed Area of additional disturbance**	2,500 SF
6.	**Existing Lot Coverage**	
	Impervious Coverage	5,590 SF
	Pervious Coverage	6,372 SF
7.	**Proposed Lot Coverage**	
	Impervious Coverage	5,290 SF
	Pervious Coverage	6,642 SF
8.	**Grading Calculations** *(cubic yards)*	
	Cut	164 cu. y
	Fill	60 cu. yd.
	Off-haul	104 cu. yd.
9.	**Parking**	
	Existing	3 Car
	Proposed	2 car
10.	**Minimum setbacks for exterior walls of proposed building area**	NA
11.	**Maximum height of proposed building area**	NA

40' A.U.E, P.U.E, D.E, & S.S.E. PER 1998 RM 045

10' P.U.E. PER 6 RM 72

(E) RESIDENCE

(E) BACKYARD

SYNTHETIC TURF

(E) Family Rm

(E) Kitchen

(N) PATIO
Patio Elev: ±99.9
Permeable pavers

(N) POOL

(N) Pool Equip

(E) WALKWAY

LAWN

(N) Concrete Concrete retaining wall, 4'H Max

TW 103.6
BW 99.9

10'-0" Setback

former proposed garage location

23'-2" To Pool

11'-9" To Fence

TW 99.75
BW 99.6

Remove Plum

Remove Date Palm-Phoenix Dactylifera

Highest corner of pool 12" above (E) grade

Prunus domestica Plum tree

remove paving

Area of Visibility Obstruction per Ordinance 2121, Chapter 13.18 See Detail Plan Sheet A3.1

6' Fence @ Corte Alegre side for Privacy & Screening from West direction traffic headlights traffic on Los Cerros Drove

21'-12"± patio retaining walls w/ 6' max fence above. T.O. Fence Elev 105.75'

1'-4" fence to PL

5" Fence setback to PL

TW 99.75
BW 98.0

35'-0"

Planting bed

TW 99.75
BW 96.7

36"± max patio retaining walls w/ 42" guardrail these 2 sides

500 LOS CERROS DRIVE
GREENBRAE, CALIFORNIA
LOT AREA = 11,932 S.F.

Gravel path

Gravel

AC Paving for Play court area

remove oak

6" Maple?? remove

Coast Live oak- Quercus Agrifolia Typ within border

ACACIA -Remove

2-8.5'x18' Parking spaces

Slope dir. 8% max

BIO-RETENTION & DISSIPATOR AREA See Civil Plans

(N) Driveway AC Paving

remove hedge

Remove CONCRETE

BRICK PLANTER (remove)

WOOD PATIO

BRICK LANDING AND STEPS

WOOD WALL

BRICK FACING

PLANTER

CONCRETE CURB

DRAIN SWALE

APPROXIMATE ROUTE OVERHEAD UTILITIES

6' WOOD FENCE

CONCRETE WALL

CONCRETE

BRICK

SHED

GATE

DRAIN

Gas Meter

HEAT PUMP

Water Meter

Drolnage Weep Hole

"SPEED LIMIT 25" Sign

S.S.C.O.

DRIVEWAY

STOP SIGN

WHITE STOP LINE

SOLID WHITE LINE

SOLID DOUBLE YELLOW LINE

ROLL-TYPE CURB & GUTTER

LOS CERROS DRIVE

DELTA = 19°54'38"
R = 490.00
L = 170.26

DELTA = 152°38'32"
R = 10.00
L = 26.47

DELTA = 2°55'04"
R = 355.00
L = 14.76

S 47°02'45" W 152.05

N

1 SITE PLAN
Scale: 1/8" = 1'-0"

TREE REMOVAL SUMMARY:

Protected trees:
- Two (2) Cost Live Oaks- 16" & 12"

Other Trees:
- One (1) Acacia Clump
- One (1) 6" Maple?? (Not certain of species)
- One (1) 9" Pittosporum Tobira
- One (1) 4' Palm
- Two (2) 3" Plum

LEGEND:

1. ○ TREE AND TRUNK DIAMETER AS NOTED
2. TYPICAL SPOT ELEVATION
3. ◇ DOWNSPOUT
4. TW TOP OF WALL

REVISION: ADDED STREET INTERSECTION CURB PAINT MARKINGS, AND SIGNS. D.H.

TOPOGRAPHIC S

LANDS OF CHANG
500 LOS CERROS DRIVE
GREENBRAE, CALIFORNIA

DAVID HARP & ASSOC
PROFESSIONAL LAND SURVE

Onju

ONJU UPDEGRAVE
ARCHITECT

110 DEER HOLLOW RD
SAN ANSELMO , CA 94960
PHONE: 415 . 457 . 7788
FAX: 415 . 457 . 7747
Email: onju@onju.net

SITE PLAN

CHANG RESIDENCE
NEW POOL & DRIVEWAY
500 LOS CERROS DR, GREENBRAE, CA
APN: 070-061-27

REVISIONS	BY
3-17-21 Des Rev	

DATE 11-12-20 Design Rev
SCALE AS NOTED
DRAWN
SHEET A1

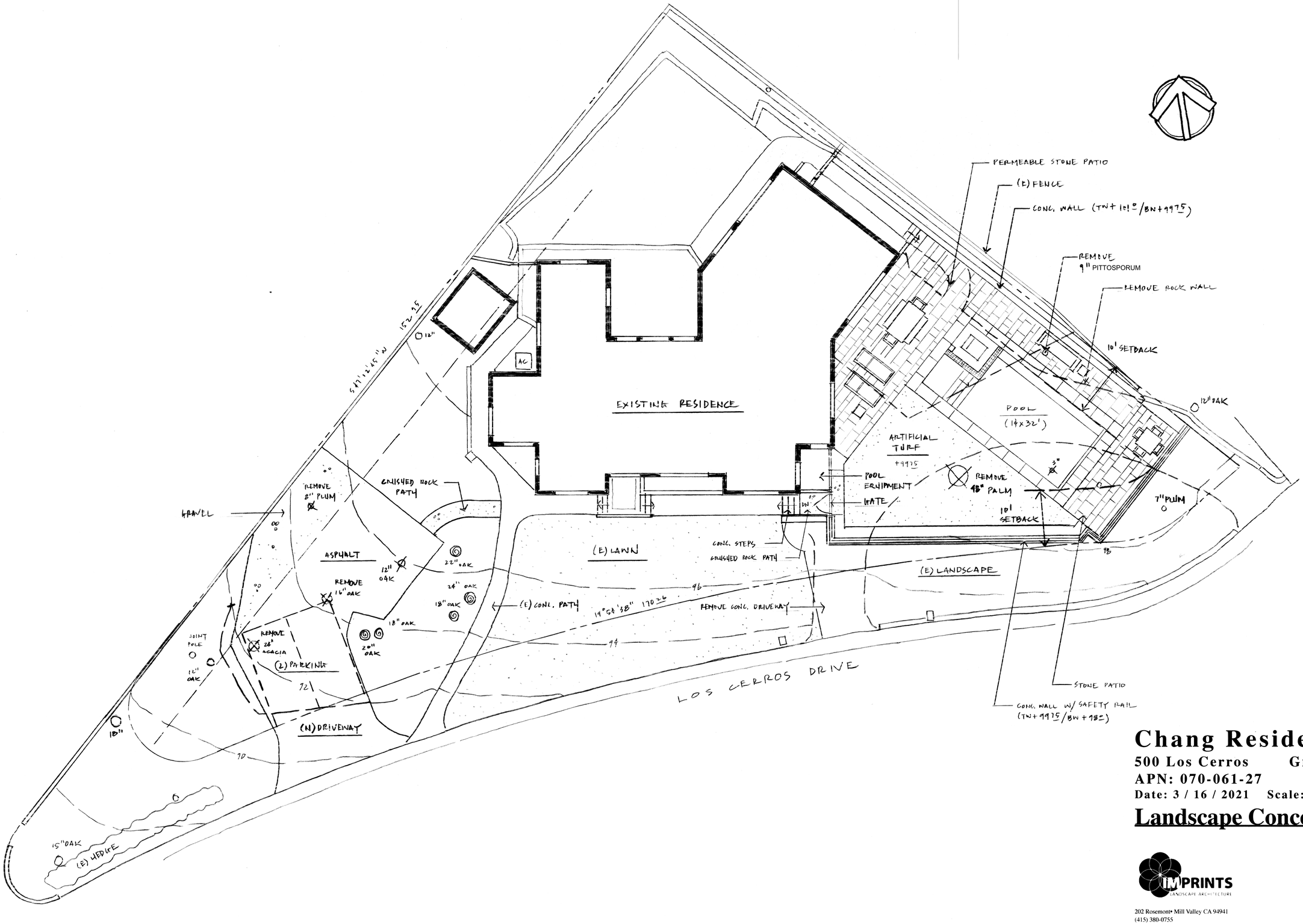

Chang Residence

500 Los Cerros Greenbrae, CA.

APN: 070-061-27

Date: 3 / 16 / 2021 Scale: 1/8"=1'-0"

Landscape Concept Plan

IMPRINTS LANDSCAPE ARCHITECTURE

202 Rosemont• Mill Valley CA 94941
(415) 380-0755
brad@imprintsgardens.com
www.imprintsgardens.com

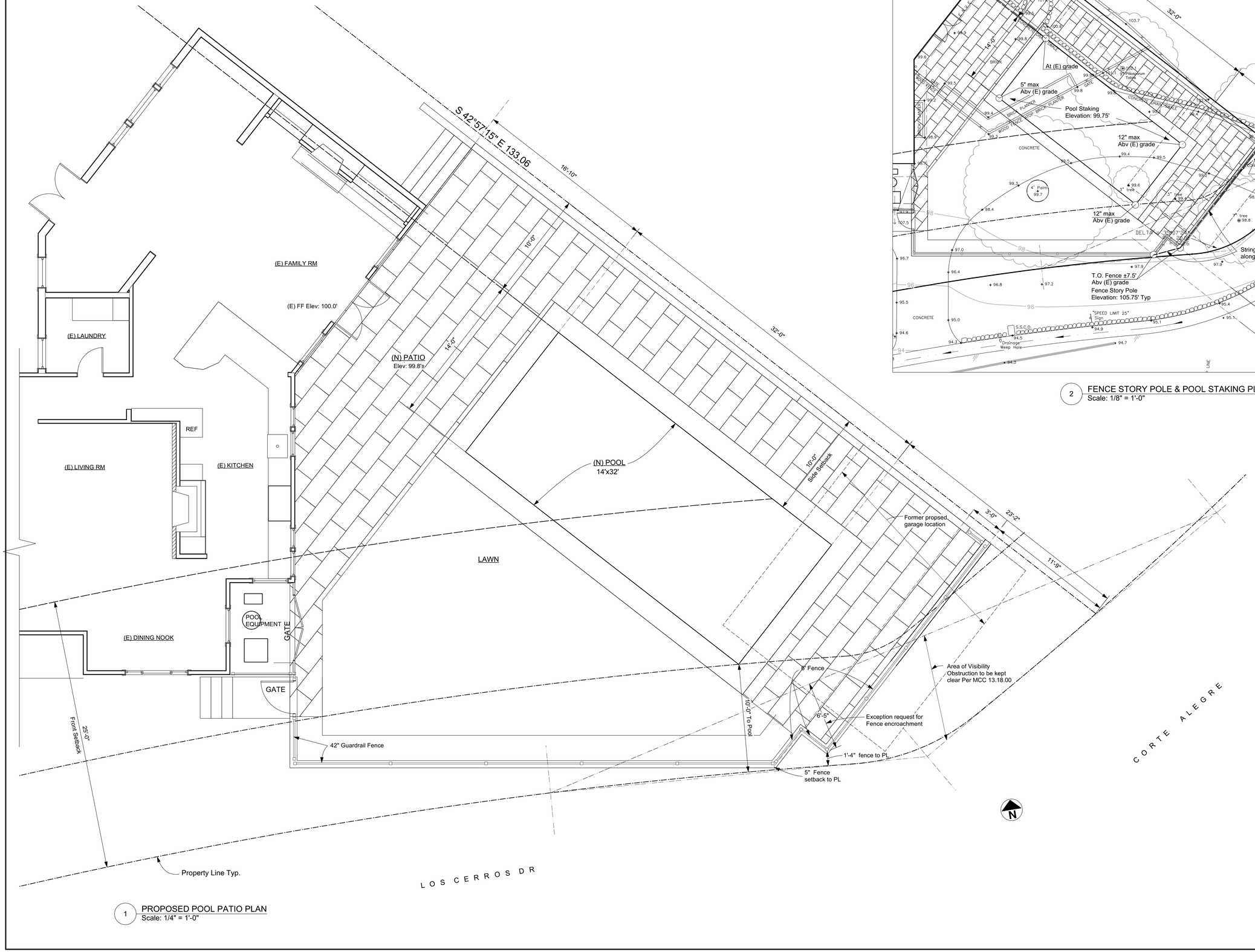

1 PROPOSED POOL PATIO PLAN
Scale: 1/4" = 1'-0"

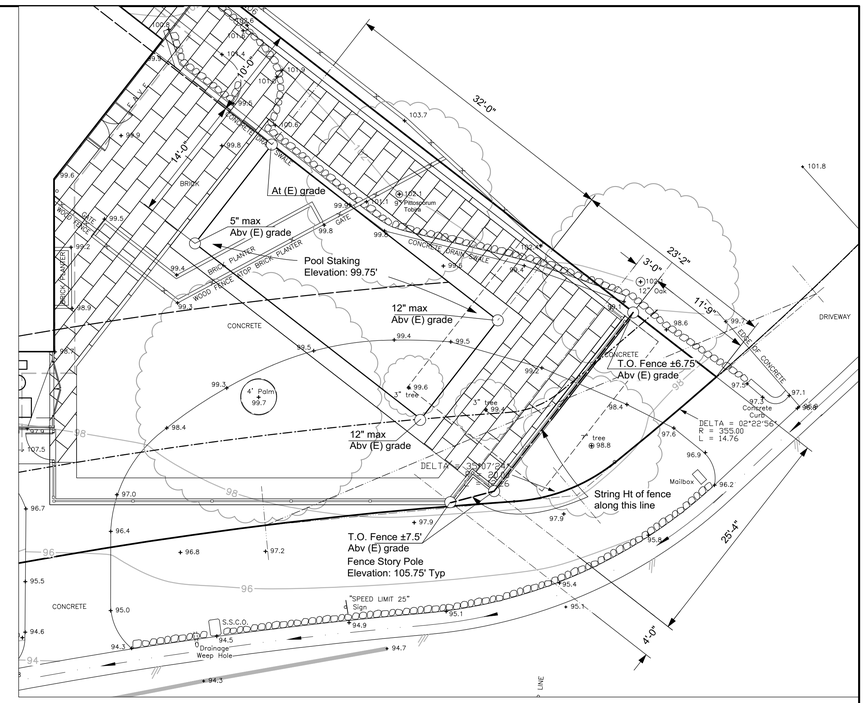

2 FENCE STORY POLE & POOL STAKING PLAN
Scale: 1/8" = 1'-0"

Onju

ONJU UPDEGRAVE
ARCHITECT

110 DEER HOLLOW RD
SAN ANSELMO , CA 94960
PHONE: 415 . 457 . 7788
FAX: 415 . 457 . 7747
Email: onju@onju.net

PLAN

CHANG RESIDENCE
NEW POOL & DRIVEWAY
500 LOS CERROS DR, GREENBRAE, CA
APN: 070-061-27

REVISIONS	BY
3-17-21 Des Rev	

DATE 11-12-20 Design Rev
SCALE AS NOTED
DRAWN
SHEET A3.1

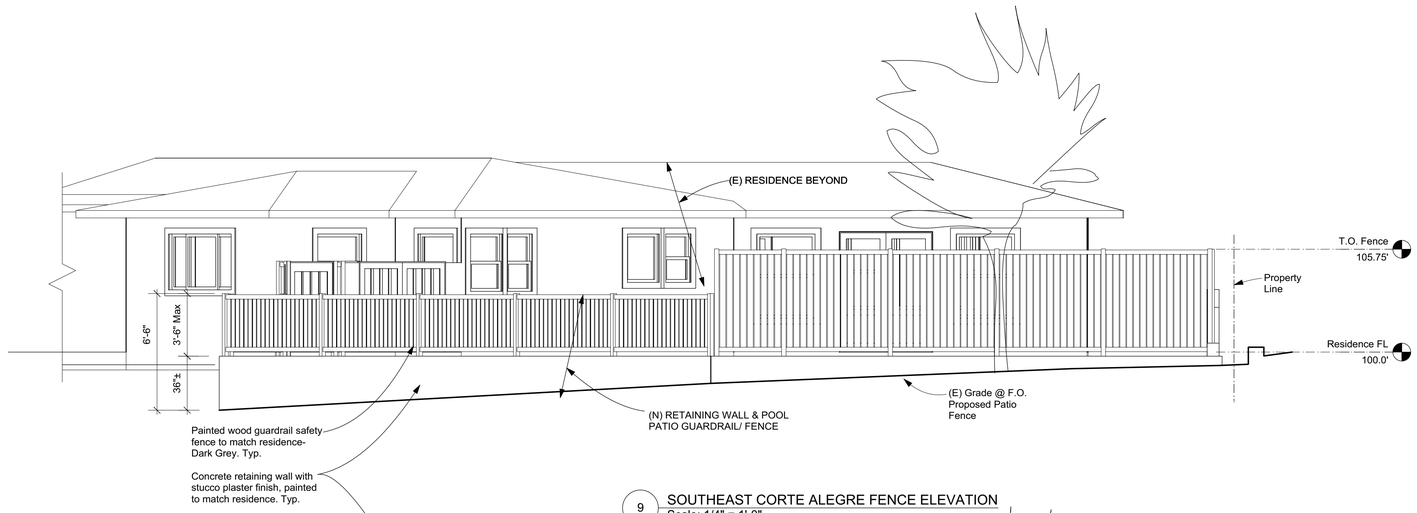

9 SOUTHEAST CORTE ALEGRE FENCE ELEVATION
Scale: 1/4" = 1'-0"

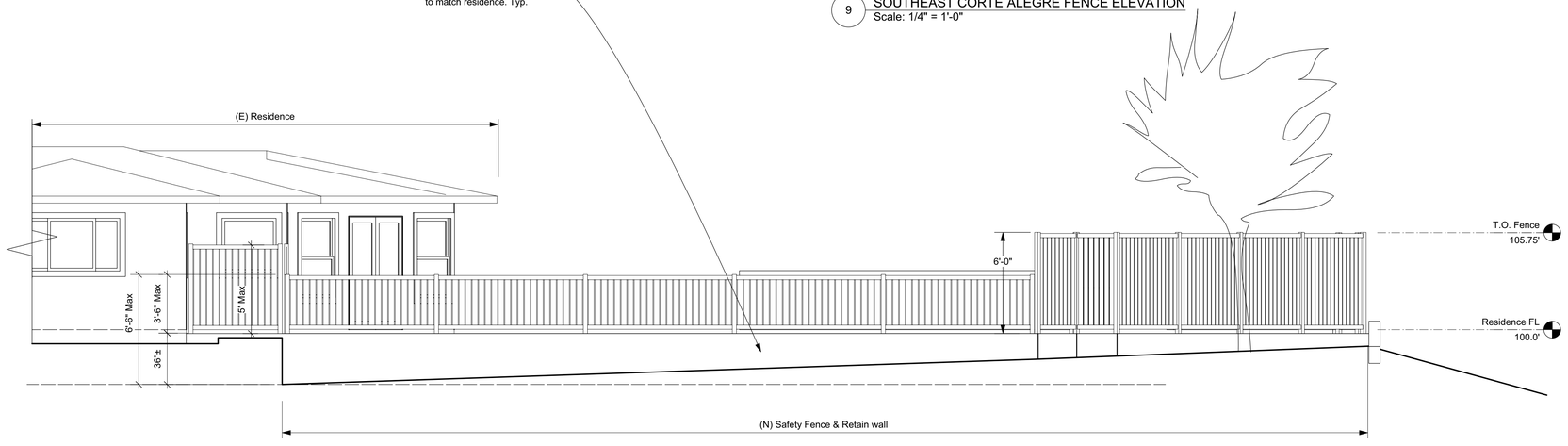

1 LOS CERROS SOUTH FENCE ELEVATION
Scale: 1/4" = 1'-0"

Onju

ONJU UPDEGRAVE
ARCHITECT

110 DEER HOLLOW RD
SAN ANSELMO . CA 94960
PHONE: 415 . 457 . 7788
FAX: 415 . 457 . 7747
Email: onju@onju.net

ELEVATIONS

CHANG RESIDENCE
NEW POOL & DRIVEWAY
500 LOS CERROS DR, GREENBRAE, CA
APN: 070-061-27

REVISIONS	BY
3-17-21 Des Rev	

DATE 11-12-20 Design Rev
SCALE AS NOTED
DRAWN
SHEET A4.1

CHANG RESIDENCE

500 LOS CERROS DR., CA 94904

A.P.N. NO: 070-061-27

LEGEND:

Symbol	Description
	SUBDIVISION BOUNDARY
	ROADWAY CENTERLINE
	RIGHT–OF–WAY
	EASEMENT AS NOTED
	SANITARY SEWER MAIN PIPE (PUBLIC)
	SANITARY SEWER MAIN PIPE (PRIVATE)
	SANITARY SEWER MANHOLE
	SANITARY SEWER MAIN PLUG
	SANITARY SEWER LATERAL
	WATER MAIN PIPE
	WATER FIRE HYDRANT
	WATER VALVE
	WATER REDUCER
	WATER MAIN PLUG
	WATER AIR RELEASE VALVE
	WATER BLOW–OFF
	WATER SERVICE AND METER
	ACCESS HATCH IN U/G STORAGE TANK
	STORM DRAIN PIPE
	STORM DRAIN MANHOLE
	STORM DRAIN PIPE PLUG
	VERTICAL CURB AND GUTTER
	ROLL CURB AND GUTTER
	VERTICAL CURB/EXTRUDED CURB
	SIDEWALK
	LOT LINE
449	LOT NUMBER
	RETAINING WALL
TRW=20.67 TF=17.33	TOP OF RETAINING WALL ELEV TOP OF FOOTING ELEV
1202.81	EXISTING SPOT ELEVATION
1202.65	PROPOSED SPOT ELEVATION
	PROPOSED CONTOUR (5' INTERVAL)
	PROPOSED CONTOUR (1' INTERVAL)
12+00	ROAD STATION

SEE VICINITY MAP

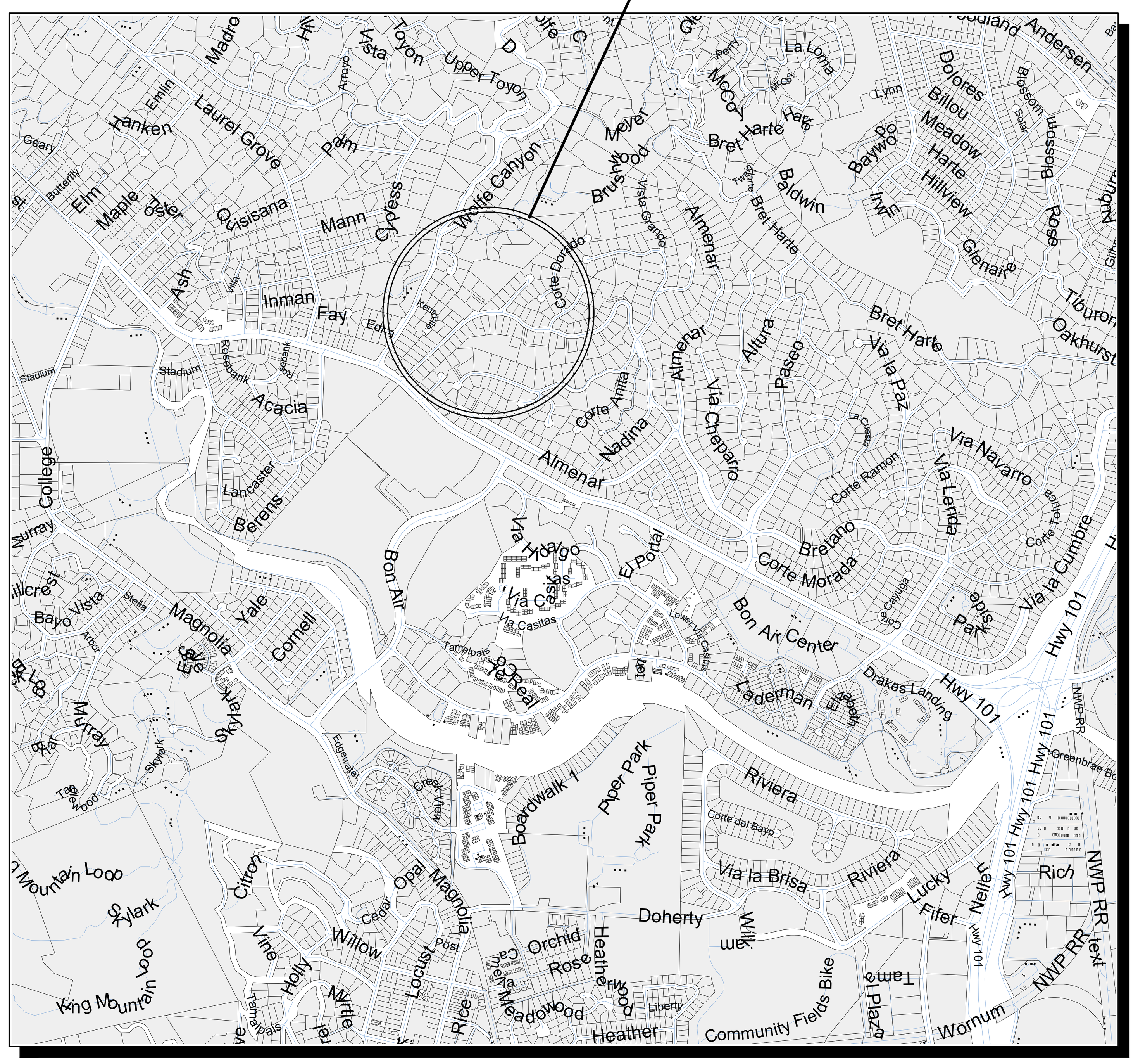

AREA MAP

SCALE: 1" = 2,500'

SITE LOCATION
500 LOS CERROS DRIVE

VICINITY MAP

SCALE: 1" = 650'

LEGEND (cont.):

Symbol	Description
	GRADE BREAK
	EXISTING ROADWAY CENTERLINE
	EXISTING RIGHT–OF–WAY
	EXISTING EASEMENT AS NOTED
8"SS	EXISTING SANITARY SEWER MAIN PIPE
	EXISTING SANITARY SEWER MANHOLE
	EXISTING SANITARY SEWER MAIN PLUG
12"W	EXISTING WATER MAIN PIPE
	EXISTING WATER FIRE HYDRANT
	EXISTING WATER VALVE
	EXISTING WATER REDUCER
	EXISTING WATER MAIN PLUG
	EXISTING WATER AIR RELEASE VALVE
	EXISTING WATER BLOW–OFF
	EXISTING STORM DRAIN PIPE
	EXISTING STORM DRAIN MANHOLE
	EXISTING STORM DRAIN PIPE PLUG
	EXISTING VERTICAL CURB AND GUTTER
	EXISTING ROLL CURB AND GUTTER
	EXISTING VERTICAL CURB/EXTRUDED CURB
	EXISTING SIGN AS NOTED
	EXISTING CONTOUR (1' INTERVAL)
FL=	FLOW LINE (GUTTER ELEVATION)
TC=	TOP OF CURB ELEVATION
P=	PAVEMENT ELEVATION
HWE=	HIGH WATER ELEVATION
FFE=	FINISH FLOOR ELEVATION
PAD=	FINISH PAD ELEVATION
POT=	POINT OF TANGENCY
POC=	POINT OF CURVATURE
PRC	POINT OF REVERSE CURVATURE
BTM=	BASIN BOTTOM ELEVATION
TL=	TRUE LENGTH
	SURVEY CONTROL POINT
	SLOPE INDICATOR
0.75%	ROAD SLOPE INDICATOR
CMU=	CONCRETE MASONRY UNIT
EXG=	EXISTING
L/S=	LANDSCAPE
	STREET LIGHT

DESIGN TEAM:

OWNER:	ARCHITECT:	SURVEYOR:	CIVIL ENGINEER:
THERESA & HOWARD CHANG	ONJU UPDEGRAVE ARCHITECT	DAVID HARP & ASSC.	VIA ATELIER, INC.
500 LOS CERROS DR. GREENBRAE, MARIN COUNTY, CA	110 DEER HOLLOW RD. SAN ANSELMO, CA	10 HARBOR VIEW CT. SAN RAFAEL, CA	9 BROOKSIDE CT. SAN ANSELMO, CA
	T: (415) 415-457-7188 E: onju@onju.net	T: (415) 453-7624 E: harp5290@gmail.com	T: (415) 774-6776 E: VLAD@VIA-ENG.COM
	CONTACT: ONJU UPDEGRAVE	CONTACT: DAVID HARP	CONTACT: VLAD IOJICA

SYMBOLS:

SECTION TAG: 2 / Cx.x — DRAWING NUMBER, SHEET NUMBER

DETAIL TAG: 2 / Cx.x — DETAIL NUMBER, SHEET NUMBER

1 (triangle) — REVISION NUMBER

2 (diamond) — KEY NOTE

DIMENSION TO FACE OF FINISH

CIVIL ENGINEERING SHEET INDEX

1 OF 6	COVER SHEET	C1.01
2 OF 6	EXISTING CONDITIONS, DEMOLITION	C2.0
3 OF 6	EROSION CONTROL PLAN	C3.0
4 OF 6	EROSION CONTROL DETAILS	C3.1
5 OF 6	GRADING AND DRAINAGE PLAN	C4.0
6 OF 6	SECTIONS & DETAILS	C5.0

GENERAL NOTES:

1. DESIGN ENGINEER SHALL CERTIFY TO THE COUNTY IN WRITING UPON THE COMPLETION OF WORK THAT ALL GRADING AND DRAINAGE IMPROVEMENTS WERE INSTALLED IN ACCORDANCE WITH THE APPROVED PLANS AND FIELD DIRECTION.
2. ALL WORK SHALL CONFORM TO THE CURRENT UNIFORM CONSTRUCTION/DEVELOPMENT STANDARDS OF COUNTY OF MARIN.
3. LOCATION OF UTILITIES SHOWN ON THESE PLANS IS APPROXIMATE. IT IS THE CONTRACTOR'S RESPONSIBILITY TO VERIFY LOCATIONS AND DEPTHS OF UTILITIES WITH THE APPROPRIATE AGENCIES PRIOR TO STARTING WORK.
4. RAINWATER LEADERS SHALL UTILIZE WYE CONNECTIONS.
5. CORRUGATED OR FLEXIBLE DRAIN PIPES ARE NOT PERMITTED.
6. DROP INLETS SHALL BE AS SHOWN ON PLANS OR APPROVED EQUIVALENT.
7. ALL ROOF DOWNSPOUTS SHALL BE CONNECTED TO UNDERGROUND STORM DRAINS.
8. NO GRADING SHALL BE COMMENCED PRIOR TO OBTAINING A GRADING PERMIT.
9. FOR RAISED FOUNDATIONS, AT LEAST TWO INCHES 2-INCH DIAMETER HOLES SHALL BE PLACED IN THE FOUNDATION TO DRAIN THE SUBFLOOR AREA. SIMILAR DRAINS SHALL BE INSTALLED IN ANY INTERIOR FOUNDATIONS SO THAT WATER IS NOT TRAPPED UNDER THE BUILDING.
10. TRAFFIC CONTROL SHALL BE PERFORMED IN ACCORDANCE WITH THE REQUIREMENTS OF THE LATEST "MANUAL OF TRAFFIC CONTROLS" PUBLISHED BY THE CALIFORNIA DEPARTMENT OF TRANSPORTATION.
11. ALL BMPS SHALL CONFORM TO THE CALIFORNIA STORMWATER QUALITY ASSOCIATION (CASQA) LATEST STORMWATER BEST MANAGEMENT PRACTICE HANDBOOK.

Preliminary, Not for Construction

ViA Atelier

Revisions: Date: By:

Sheet Title: COVER SHEET
Project: CHANG RESIDENCE
Address: 500 LOS CERROS DRIVE, GREENBRAE, CA 94904 (APN:070-061-27)

REGISTERED PROFESSIONAL ENGINEER VLAD G. IOJICA C 73861 Exp. 6-30-21 CIVIL STATE OF CALIFORNIA

Plans Prepared By: ViA Atelier, Inc. Engineering Consultants
9 Brookside Ct., San Anselmo, CA 94960
Ph:(415) 774-6776 E:vlad@via-eng.com
Date:

JOB NO: 2101.b

DATE: 03.17.'21

Drawn by: p.y.
Reviewed by: v.i.

SHEET: C1.0

D:\VIA\2101b_500 Los cerros Drive, Greenbrae\CAD\C10.dwg Plotted by: Vlad Iojica Mar 17, 2021 9:06am

LEGEND:

REMOVE EX. TREE ×

LIMITS OF WORK: L.O.W.

REMOVE EXISTING SITE WALLS, DRAINAGE SWALE, PAVEMENT AT DRIVEWAY IN THE AREA HIGHLIGHTED

(E) SINGLE FAMILY RESIDENCE
F.F.EL: 100'

500 LOS CERROS DRIVE
GREENBRAE, CALIFORNIA
LOT AREA = 11,932 S.F.

REMOVE PORTION OF LANDSCAPE HEDGE AND RE-GRADE

40' A.U.E. P.U.E. D.E. & S.S.E. PER 1998 BM 045

LOS CERROS DRIVE

CORTE ALEGRE

EXISTING CONDITIONS & DEMOLITION PLAN PLAN
SCALE: 1" = 10'

10' 0' 10'
SCALE IN FEET
SCALE: 1" = 10'

Preliminary, Not for Construction

D:\ViA\2101b_500 Los cerros Drive, Greenbrae\CAD\C20.dwg Plotted by: Vlad Iojica Mar 17, 2021 12:09pm

ViA Atelier

By:
Date:
Revisions:

Sheet Title: EXISTING CONDITIONS AND DEMOLITION PLAN

Project: CHANG RESIDENCE

Address: 500 LOS CERROS DRIVE, GREENBRAE, CA 94904 (APN:070-061-21)

PROFESSIONAL ENGINEER VLAD G. IOJICA C 73861 Exp. 6-30-21 CIVIL STATE OF CALIFORNIA REGISTERED

Plans Prepared By:
ViA Atelier, Inc.
Engineering Consultants
9 Brookside Ct., San Anselmo, CA 94960
Ph:(415) 774-6776 E:vlad@via-eng.com

JOB NO: 2101.b

DATE: 03.17.'21

Drawn by: p.y.
Reviewed by: v.i.

SHEET:
C2.0
2 OF 6

EROSION CONTROL LEGEND:

(A) INSTALL FIBER ROLLS PER CASQA SE-5 — 1 / C3.1

(B) INSTALL SANITARY WASTE MANAGEMENT (PORTABLE RESTROOM) PER CASQA WM-9

(C) INSTALL STORM DRAIN INLET PROTECTION PER CASQA SE-10 — 3 / C3.1

(D) IMMEDIATELY REVEGETATE WITH LANDSCAPING OR UTILIZE GEOTEXTILE MATTING (PER CASQA EC-7) OF DISTURBED SOILS UNTIL LANDSCAPE IMPROVEMENTS ARE COMPLETED. APPROX. LIMITS SHOWN. — 4 / C3.1

(E) DUST CONTROL, TO IMPLEMENT THROUGHOUT THE CONSTRUCTION SITE DURING ALL PHASES OF CONSTRUCTION IN ACCORDANCE WITH BMP TABLE: — 5 / C3.1

CONSTRUCTION ENTRANCE PER CASQA TC-1 — 6 / C3.1

(G) CONCRETE WASH AREA — 7 / C3.1

(H) TREE FENCE (Tree Protection Zone) — 8 / C3.1

(J) LIMITS AND DISTURBED AREA

(K) CONSTRUCTION STORAGE AREAS PER CASQA WM-1

(L) INSTALL GRAVEL BAG SEDIMENT TRAP DURING CONSTRUCTION TO PREVENT SEDIMENT TRANSPORT PER CASQA SE-6. — 5 / C3.1

40' A.U.E. P.U.E. D.E. & S.S.E. PER 1998 RM 045

(E) SINGLE FAMILY RESIDENCE
F.F.EL: 100'

500 LOS CERROS DRIVE
GREENBRAE, CALIFORNIA
LOT AREA = 11,932 S.F.

(N) SWIMMING POOL

CHANNEL DRAIN
RE: 99.55'

CONCRETE PAVEMENT

BIO-DETENTION BASIN OUTLET:
RE:89.8
IE: 87.3

STORMWATER DISSIPATER
IE(PIPE): 87.0'

LOS CERROS DRIVE

CORTE ALEGRE

SOLID WHITE LINE

SOLID DOUBLE YELLOW LINE

WHITE STOP LINE

STOP SIGN

ROLL-TYPE CURB & GUTTER

DRIVEWAY

"SPEED LIMIT 25" & Stop

Preliminary, Not for Construction

EROSION CONTROL PLAN
SCALE: 1" = 10'

SCALE IN FEET
SCALE: 1" = 10'

D:\VIA\2101b_500 Los cerros Drive, Greenbrae\CAD\C30.dwg Plotted by: Vlod Ivjica Mar 17, 2021 10:51am

ViA Atelier

By:
Date:
Revisions:

Sheet Title: EROSION CONTROL PLAN
Project: CHANG RESIDENCE
Address: 500 LOS CERROS DRIVE, GREENBRAE, CA 94904 (APN:070-061-21)

PROFESSIONAL ENGINEER VLAD G. IVJICA C 73861 Exp. 6-30-21 CIVIL STATE OF CALIFORNIA

Plans Prepared By:
VIA Atelier, Inc.
Engineering Consultants
9 Brookside Ct., San Anselmo, CA 94960
Ph:(415) 714-6776 E:vlod@via-eng.com

Date:

JOB NO: 2101.b
DATE: 03.17.'21
Drawn by: p.y.
Reviewed by: v.i.
SHEET: C3.0
3 OF 6

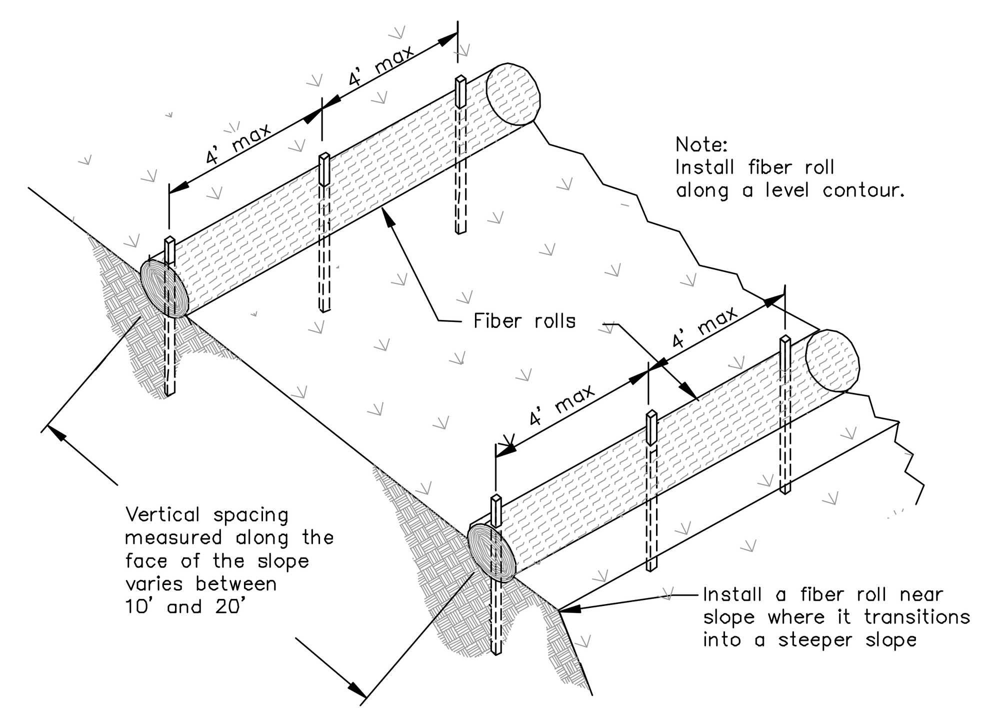

TYPICAL FIBER ROLL INSTALLATION

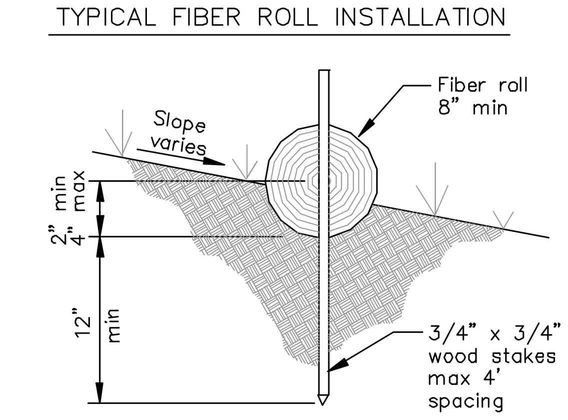

ENTRENCHMENT DETAIL

Purpose:
A fiber roll consists of straw, coir, or other biodegradable materials bound into a tight tubular roll wrapped by netting, which can be biodegradable or natural. Additionally, gravel core fiber rolls are available, which contain an imbedded ballast material such as gravel or sand for additional weight when staking the rolls are not feasible (such as use as inlet protection). When fiber rolls are placed at the toe and on the face of slopes along the contours, they intercept runoff, reduce its flow velocity, release the runoff as sheet flow, and provide removal of sediment from the runoff (through sedimentation). By interrupting the length of a slope, fiber rolls can also reduce sheet and rill erosion until vegetation is established.

Application:
- *Along the toe, top, face, and at grade breaks of exposed and erodible slopes to shorten slope length and spread runoff as sheet flow.*
- *At the end of a downward slope where it transitions to a steeper slope.*
- *Along the perimeter of a project.*
- *As check dams in unlined ditches with minimal grade.*
- *Down-slope of exposed soil areas.*
- *At operational storm drains as a form of inlet protection.*
- *Around temporary stockpiles.*

Installation:
Follow manufacturer's recommendations for installation. In general, these will be as follows:
Locate fiber rolls on level contours spaced as follows:
- *Slope inclination of 4:1 (H:V) or flatter: Fiber rolls should be placed at a maximum interval of 20 ft.*
- *Slope inclination between 4:1 and 2:1 (H:V): Fiber Rolls should be placed at a maximum interval of 15 ft. (a closer spacing is more effective).*
- *Slope inclination 2:1 (H:V) or greater: Fiber Rolls should be placed at a maximum interval of 10 ft. (a closer spacing is more effective).*
- *Prepare the slope before beginning installation.*
- *Dig small trenches across the slope on the contour. The trench depth should be ¼ to 1/3 of the thickness of the roll, and the width should equal the roll diameter, in order to provide area to backfill the trench.*
- *It is critical that rolls are installed perpendicular to water movement, and parallel to the slope contour.*
- *Start building trenches and installing rolls from the bottom of the slope and work up.*
- *It is recommended that pilot holes be driven through the fiber roll. Use a straight bar to drive holes through the roll and into the soil for the wooden stakes.*
- *Turn the ends of the fiber roll up slope to prevent runoff from going around the roll.*
- *Stake fiber rolls into the trench.*
  - *Drive stakes at the end of each fiber roll and spaced 4 ft maximum on center.*
  - *Use wood stakes with a nominal classification of 0.75 by 0.75 in. and minimum length of 24 in.*
- *If more than one fiber roll is placed in a row, the rolls should be overlapped, not abutted.*

Inspection and maintenance:
- *BMPs must be inspected in accordance with General Permit requirements for the associated project type and risk level. It is recommended that at a minimum, BMPs be inspected weekly, prior to forecasted rain events, daily during extended rain events, and after the conclusion of rain events.*
- *Repair or replace split, torn, unraveling, or slumping fiber rolls.*
- *If the fiber roll is used as a sediment capture device, or as an erosion control device to maintain sheet flows, sediment that accumulates in the BMP should be periodically removed in order to maintain BMP effectiveness. Sediment should be removed when sediment accumulation reaches one-third the designated sediment storage depth.*
- *If fiber rolls are used for erosion control, such as in a check dam, sediment removal should not be required as long as the system continues to control the grade. Sediment control BMPs will likely be required in conjunction with this type of application.*
- *Repair any rills or gullies promptly.*

(1) FIBER ROLL
CASQA-BMP SE-5
SECTION
SCALE: NO SCALE

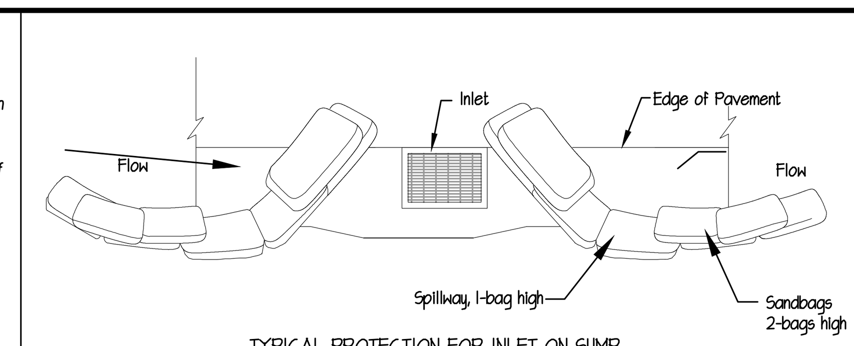

TYPICAL PROTECTION FOR INLET ON SUMP
DI PROTECTION TYPE 3

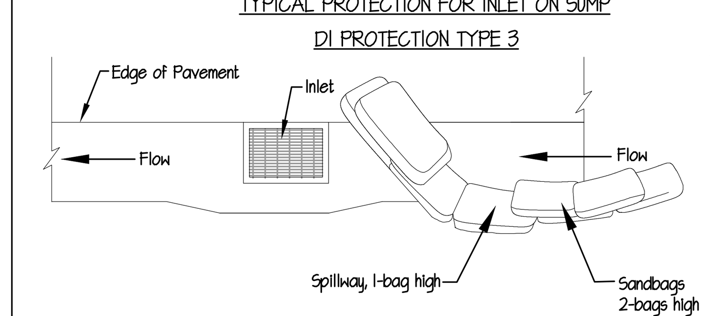

TYPICAL PROTECTION FOR INLET ON GRADE
DI PROTECTION TYPE 3

NOTES:
1. Intended for short-term use.
2. Use to inhibit non-storm water flow.
3. Allow for proper maintenance and cleanup.
4. Bags must be removed after adjacent operation is completed
5. Not applicable in areas with high silts and clays without filter fabric.

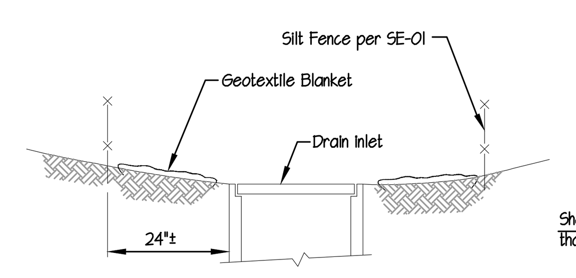

SECTION A-A

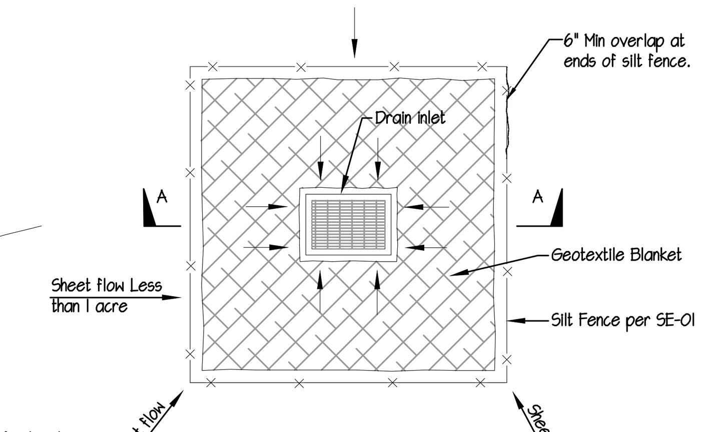

PLAN

NOTES:
1. For use in areas where grading has been completed and final soil stabilization and seeding are pending.
2. Not applicable in paved areas.
3. Not applicable with concentrated flows.

DI PROTECTION TYPE 1

Purpose:
Storm drain inlet protection consists of a sediment filter or an impounding area in, around or upstream of a storm drain, drop inlet, or curb inlet. Storm drain inlet protection measures temporarily pond runoff before it enters the storm drain, allowing sediment to settle. Some filter configurations also remove sediment by filtering, but usually the ponding action results in the greatest sediment reduction. Temporary geotextile storm drain inserts attach underneath storm drain grates to capture and filter storm water.

Application:
Every storm drain inlet receiving runoff from unstabilized or otherwise active work areas should be protected. Inlet protection should be used in conjunction with other erosion and sediment controls to prevent sediment-laden stormwater and non-stormwater discharges from entering the storm drain system.

Inspection & Maintenance:
- *BMPs must be inspected in accordance with General Permit requirements for the associated project type and risk level. It is recommended that at a minimum, BMPs be inspected weekly, prior to forecasted rain events, daily during extended rain events, and after the conclusion of rain events.*
- *Silt Fences. If the fabric becomes clogged, torn, or degrades, it should be replaced. Make sure the stakes are securely driven in the ground and are in good shape (i.e., not bent, cracked, or splintered, and are reasonably perpendicular to the ground). Replace damaged stakes. At a minimum, remove the sediment behind the fabric fence when accumulation reaches one-third the height of the fence or barrier height.*
- *Gravel Filters. If the gravel becomes clogged with sediment, it should be carefully removed from the inlet and either cleaned or replaced. Since cleaning gravel at a construction site may be difficult, consider using the sediment-laden stone as fill material and put fresh stone around the inlet. Inspect bags for holes, gashes, and snags, and replace bags as needed. Check gravel bags for proper arrangement and displacement.*
- *Sediment that accumulates in the BMP should be periodically removed in order to maintain BMP effectiveness. Sediment should be removed when the sediment accumulation reaches one-third of the barrier height.*
- *Inspect and maintain temporary geotextile insert devices according to manufacturer's specifications.*
- *Remove storm drain inlet protection once the drainage area is stabilized.*
  - *Clean and regrade area around the inlet and clean the inside of the storm drain inlet, as it should be free of sediment and debris at the time of final inspection.*

(2) STORM DRAIN INLET PROTECTION
CASQA-BMP SE-10
SCALE: NO SCALE

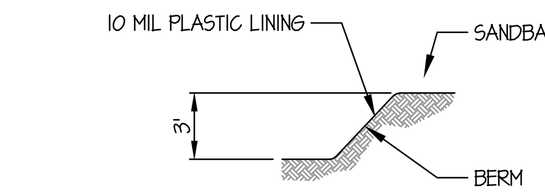

SECTION A-A

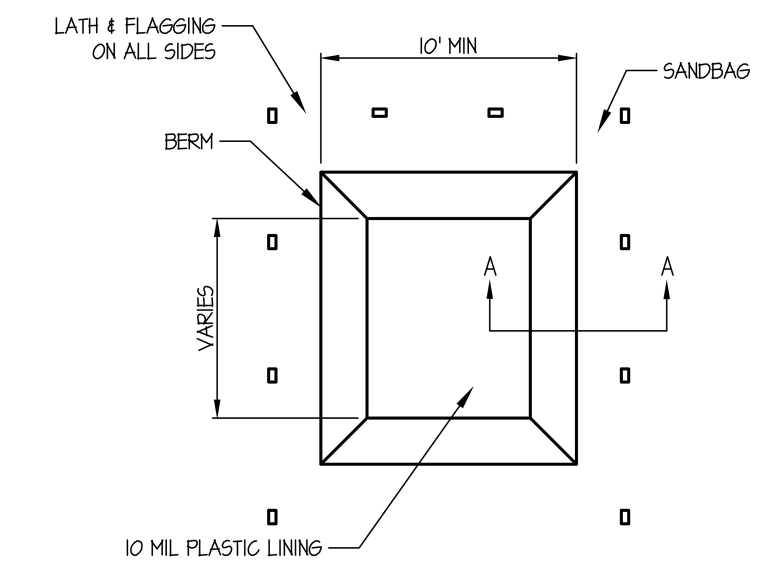

PLAN

(7) CONCRETE WASTE MANAGEMENT
PLAN/SECTION
SCALE: NO SCALE

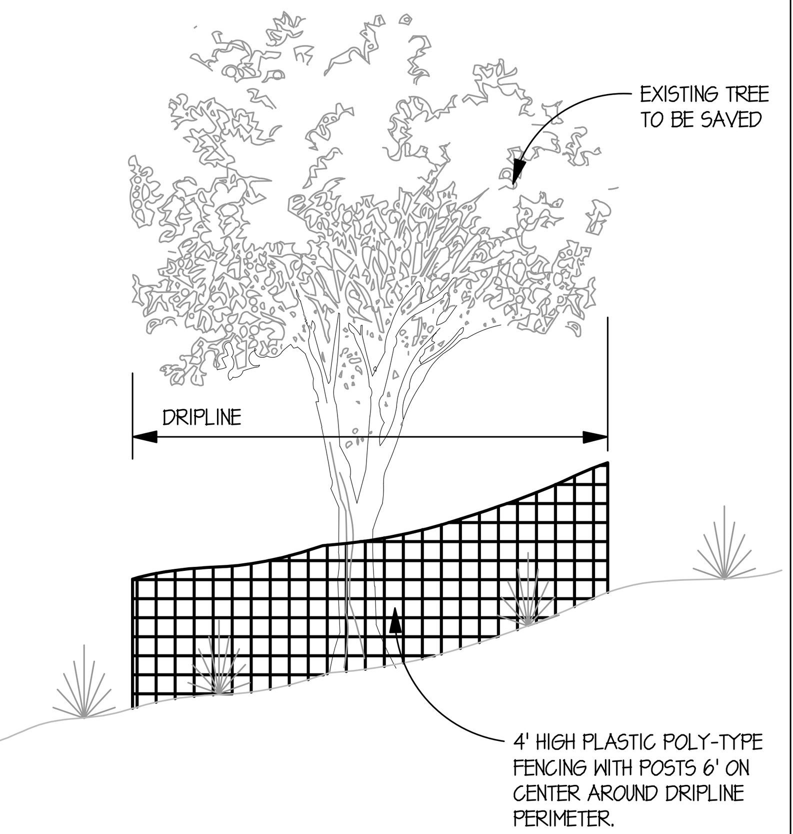

(8) TREE PROTECTION DETAIL
ELEVATION
SCALE: NO SCALE

URBAN RUNOFF POLLUTION NOTES

1. *Stabilize all denuded areas and maintain erosion control measures continuously between October 1 and May 1. Remove off-haul materials promptly. Stockpiled soils and other materials shall be tarped, at the request of the Building Department or Public Works.*
2. *Store, handle and dispose of construction materials and wastes so as to prevent their entry to the storm drain system, contractor must not allow concrete, washwaters, slurries, paint or other materials to enter catch basins, the onsite storm drain system, or onsite or offsite surface flow runoff.*
3. *Use filtration or other measures to remove sediment from dewatering effluent.*
4. *No cleaning, fueling or maintaining vehicles on site shall be permitted in any manner that allows deleterious materials from entering catch basins or to enter site runoff.*
5. *Use of pesticides and/or fertilizers shall be reduced and shall be controlled to prevent pollution runoff.*

EROSION & SEDIMENT CONTROL NOTES

1. *Erosion, sedimentation and pollution controls shall be provided in accordance with CASQA's Best Management Practices, current edition and with the CA RWQCB's erosion and sediment control field manual, current edition.*
2. *Erosion control measures shall be installed prior to October 15 and shall be maintained by the contractor in proper working order throughout the first winter. This protection shall consist of appropriate filter fences, diversion berms, straw bale dikes, etc. These devices shall be placed in order to minimize erosion and to collect sediment generated by the construction of this project. Except for paved and landscaped areas already completed, all graded areas shall be hydroseeded in order to prevent erosion of bare earth. The contractor is responsible for erosion & sediment control all year long during all site work.*
3. *All banks and all graded areas shall be hydroseeded to control erosion or the approved groundcover installed by October 15.*
4. *The contractor shall maintain a clean site at all times which is free of debris, hazardous wastes, or stockpiled material unless approved by the project engineer. All approved stockpiles shall be covered and protected to prevent storm water pollution.*
5. *Stabilize all denuded areas and maintain erosion control measures continuously between October 1 and April 15.*
6. *Remove spoils promptly, and avoid stockpiling of fill materials when rain is forecast. If rain threatens, stockpiled soils and other materials should be tarped, at the request of the city engineer.*
7. *Store, handle and dispose of construction materials and wastes so as to avoid their entry to the storm system. Contractor must not allow concrete, washwaters, slurries, paint or other materials to enter catch basins or to enter site runoff.*
8. *Use filtration or other measures to remove sediment from dewatering effluent.*
9. *Install filter fabric bags inside all catch basins and maintain during winter storms.*
10. *No cleaning, fueling, or maintaining vehicles on-site, except in an area designed to contain and treat runoff.*
11. *Use of pesticides and/or fertilizers, when applied, shall be controlled to prevent pollution runoff.*
12. *All areas of cut, fill and ungraded areas disturbed by the grading operation shall be hydromulched or and approved landscaping groundcover planted after all work has been completed. The contractor shall be responsible for furnishing labor and material to accomplish a dense plant cover for erosion control.*
13. *Dewater basement and excavations with tank and filtration device prior to discharge into SD system. Provide effluent samples for testing hourly per regional water standards.*
14. *Per the Federal and State Water Quality Acts, the owner is solely responsible for controlling construction water discharge.*
15. *Project is subject to the requirements of the winter grading moratorium as per the Marin County Code.*

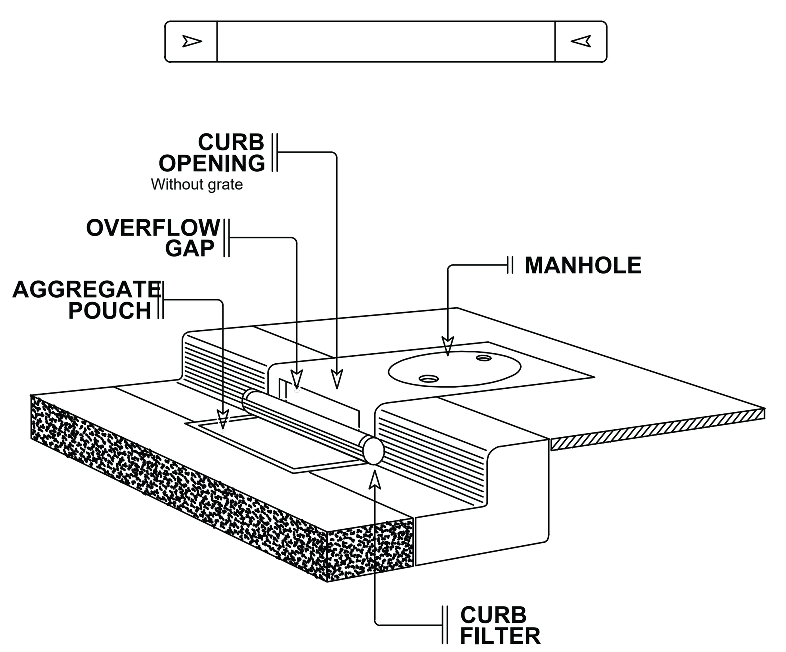

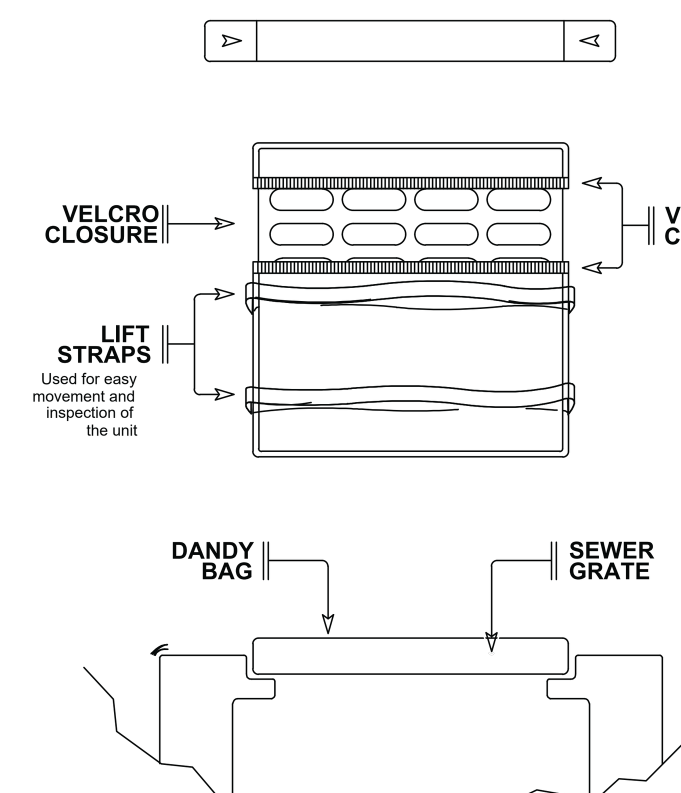

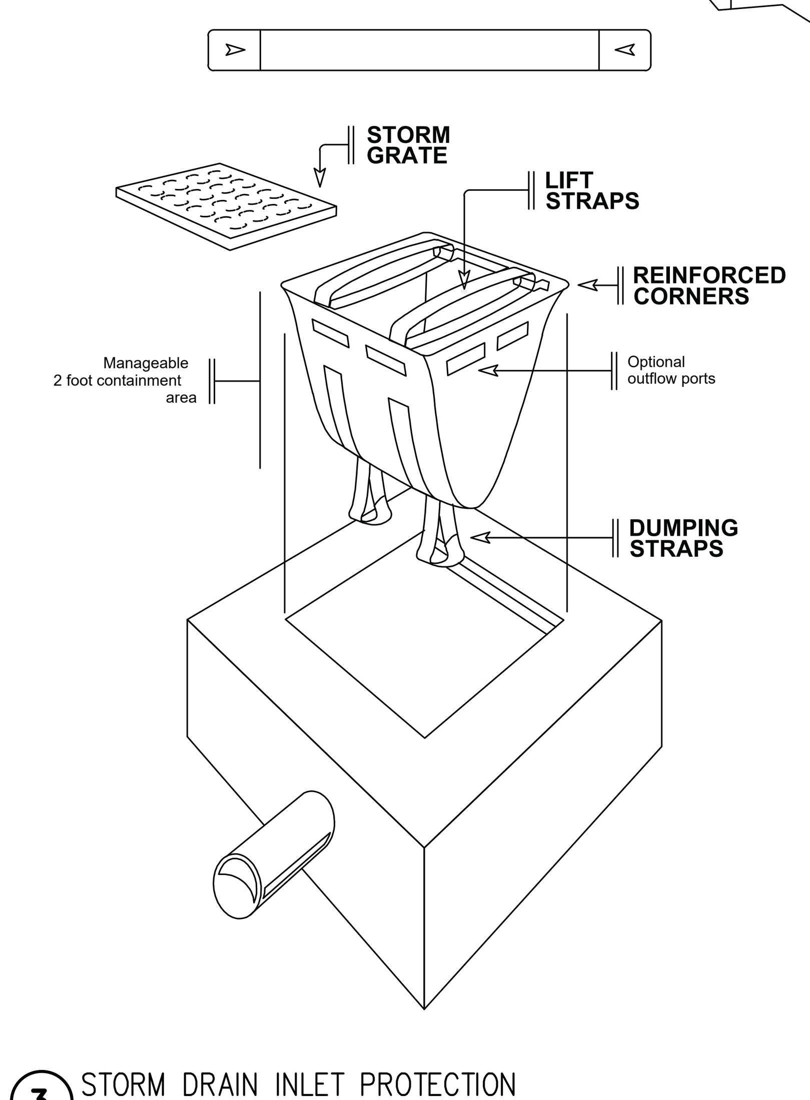

(3) STORM DRAIN INLET PROTECTION
CASQA-BMP SE-10
SCALE: NO SCALE

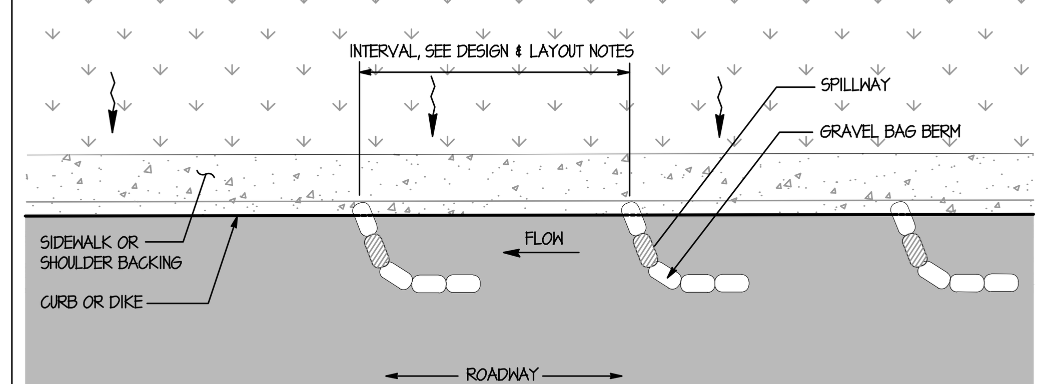

Purposes:
A gravel bag berm is a series of gravel-filled bags placed on a level contour to intercept sheet flows. Gravel bags pond sheet flow runoff, allowing sediment to settle out, and release runoff slowly as sheet flow, preventing erosion.

Application:
- *As a linear sediment control measure:*
  - *Below the toe of slopes and erodible slopes*
  - *As sediment traps at culvert/pipe outlets*
  - *Below other small cleared areas*
  - *Along the perimeter of a site*
  - *Down slope of exposed soil areas*
  - *Around temporary stockpiles and spoil areas*
  - *Parallel to a roadway to keep sediment off paved areas*
  - *Along streams and channels*
- *As a linear erosion control measure:*
  - *Along the face and at grade breaks of exposed and erodible slopes to shorten slope length and spread runoff as sheet flow.*
  - *At the top of slopes to divert runoff away from disturbed slopes.*
  - *As chevrons (small check dams) across mildly sloped construction roads. For check dam use in channels, see SE-4, Check Dams.*

Design and Layout:
- *When used for slope interruption, the following slope/sheet flow length combinations apply:*
  - *Slope inclination of 4:1 (H:V) or flatter: Gravel bags should be placed at a maximum interval of 20 ft, with the first row near the slope toe.*
  - *Slope inclination between 4:1 and 2:1 (H:V): Gravel bags should be placed at a maximum interval of 15 ft. (a closer spacing is more effective), with the first row near the slope toe.*

Inspection and Maintenance:
- *BMPs must be inspected in accordance with General Permit requirements for the associated project type and risk level. It is recommended that at a minimum, BMPs be inspected weekly, prior to forecasted rain events, daily during extended rain events, and after the conclusion of rain events.*
- *Gravel bags exposed to sunlight will need to be replaced every two to three months due to degrading of the bags.*
- *Reshape or replace gravel bags as needed.*
- *Repair washouts or other damage as needed.*
- *Sediment that accumulates in the BMP should be periodically removed in order to maintain BMP effectiveness. Sediment should be removed when the sediment accumulation reaches one-third of the barrier height.*
- *Remove gravel bag berms when no longer needed and recycle gravel fill whenever possible and properly dispose of bag material. Remove sediment accumulation and clean, re-grade, and stabilize the area.*

(4) GRAVEL BAG FLOW DIVERSION
CASQA-BMP SE-6
SCALE: NO SCALE

Implementation
Dust Control Practices

Dust control BMPs generally stabilize exposed surfaces and minimize activities that suspend or track dust particles. The following table presents dust control practices that can be applied to varying site conditions that could potentially cause dust. For heavily traveled and disturbed areas, wet suppression (watering), chemical dust suppression, gravel asphalt surfacing, temporary gravel construction entrances, equipment wash-out areas, and haul truck covers can be employed as dust control applications. Permanent or temporary vegetation and mulching can be employed for areas of occasional or no construction traffic. Preventive measures include minimizing surface areas to be disturbed, limiting onsite vehicle traffic to 15 mph or less, and controlling the number and activity of vehicles on a site at any given time.

Dust Control Practices

Site Condition	Permanent Vegetation	Mulching	Wet Suppression (Watering)	Chemical Dust Suppression	Gravel or Asphalt	Temporary Gravel Construction Entrances/Equipment Wash Down	Synthetic Covers	Minimize Extent of Disturbed Area
Disturbed Areas not Subject to Traffic	x	x	x	x	x			x
Disturbed Areas Subject to Traffic			x	x	x	x		x
Material Stockpiles		x	x	x			x	x
Demolition			x			x	x	
Clearing/ Excavation			x	x				x
Truck Traffic on Unpaved Roads			x	x	x	x	x	
Tracking					x	x		

Chemical dust suppressants include: mulch and fiber based dust palliatives (e.g. paper mulch with gypsum binder), salts and brines (e.g. calcium chloride, magnesium chloride), non-petroleum based organics (e.g. vegetable oil, lignosulfonate), petroleum based organics (e.g. asphalt emulsion, dust oils, petroleum resins), synthetic polymers (e.g. polyvinyl acetate, vinyls, acrylic), clay additives (e.g. bentonite, montimorillonite) and electrochemical products (e.g. enzymes, ionic products).

Additional preventive measures include:

Schedule construction activities to minimize exposed area (see EC-1, Scheduling).

Quickly treat exposed soils using water, mulching, chemical dust suppressants, or stone/gravel layering.

Identify and stabilize key access points prior to commencement of construction.

Minimize the impact of dust by anticipating the direction of prevailing winds.

Restrict construction traffic to stabilized roadways within the project site, as practicable.

Water should be applied by means of pressure-type distributors or pipelines equipped with a spray system or hoses and nozzles that will ensure even distribution.

All distribution equipment should be equipped with a positive means of shutoff.

Unless water is applied by means of pipelines, at least one mobile unit should be available at all times to apply water or dust palliative to the project.

If reclaimed waste water is used, the sources and discharge must meet California Department of Health Services water reclamation criteria and the Regional Water Quality

(5) DUST CONTROL
CASQA-BMP WE-1
SCALE: NO SCALE

Preliminary,
Not for Construction

ViA Atelier

Revisions: | Date: | By:

Sheet Title: EROSION CONTROL DETAILS

Project: CHANG RESIDENCE

Address: 500 LOS CERROS DRIVE, GREENBRAE, CA 94904 (APN:070-061-27)

REGISTERED PROFESSIONAL ENGINEER
VLAD G. IOJICA
C 73861
Exp. 6-30-21
CIVIL
STATE OF CALIFORNIA

Date:

Plans Prepared By:
ViA Atelier, Inc.
Engineering Consultants
9 Brookside Ct., San Anselmo, CA 94960
Ph:(415) 774-6776 E:vlad@via-eng.com

JOB NO: 2101.b

DATE: 03.17.'21

Drawn by: p.y.
Reviewed by: v.i.

SHEET:
C3.1

D:\VIA\2101b_500 Los cerros Drive, Greenbrae\CAD\C31.dwg Plotted by: Vlad Iojica Mar 17, 2021 10:52am

EARTHWORK QUANTITIES:

UN-FACTORED GRADING VOLUMES:

Grading Quantities Estimate

500 Los Cerros Drive — **Date:** 10-Mar-21
Greenbrae, Marin County

item	location on the site	estimated quantities [cu.yd.]	
		cut	fill
3	Excavation for Drwy.	23.8	2.6
4	Excavation for Bio-Detention/Dissip	16.7	15.3
5	New Patio, Lawn Area	6.5	42.1
6	New Pool	117.0	
	Totals:	**164.0**	**60.0**
	Export Material:	**104.0**	

The contractor shall be aware that the excavation and fill quantities shown on the plans or available in this office are based on the best information available. The Engineer, however, takes no responsibility for shortages or excesses in cuts and fills. These quantities can vary based on the conditions of the area at the time of topographic survey, and conditions during the course of construction. Conditions and methods of operation can vary greatly and affect the quantities indicted. The grading contractor shall be responsible for determining his own cut and fill quantities.

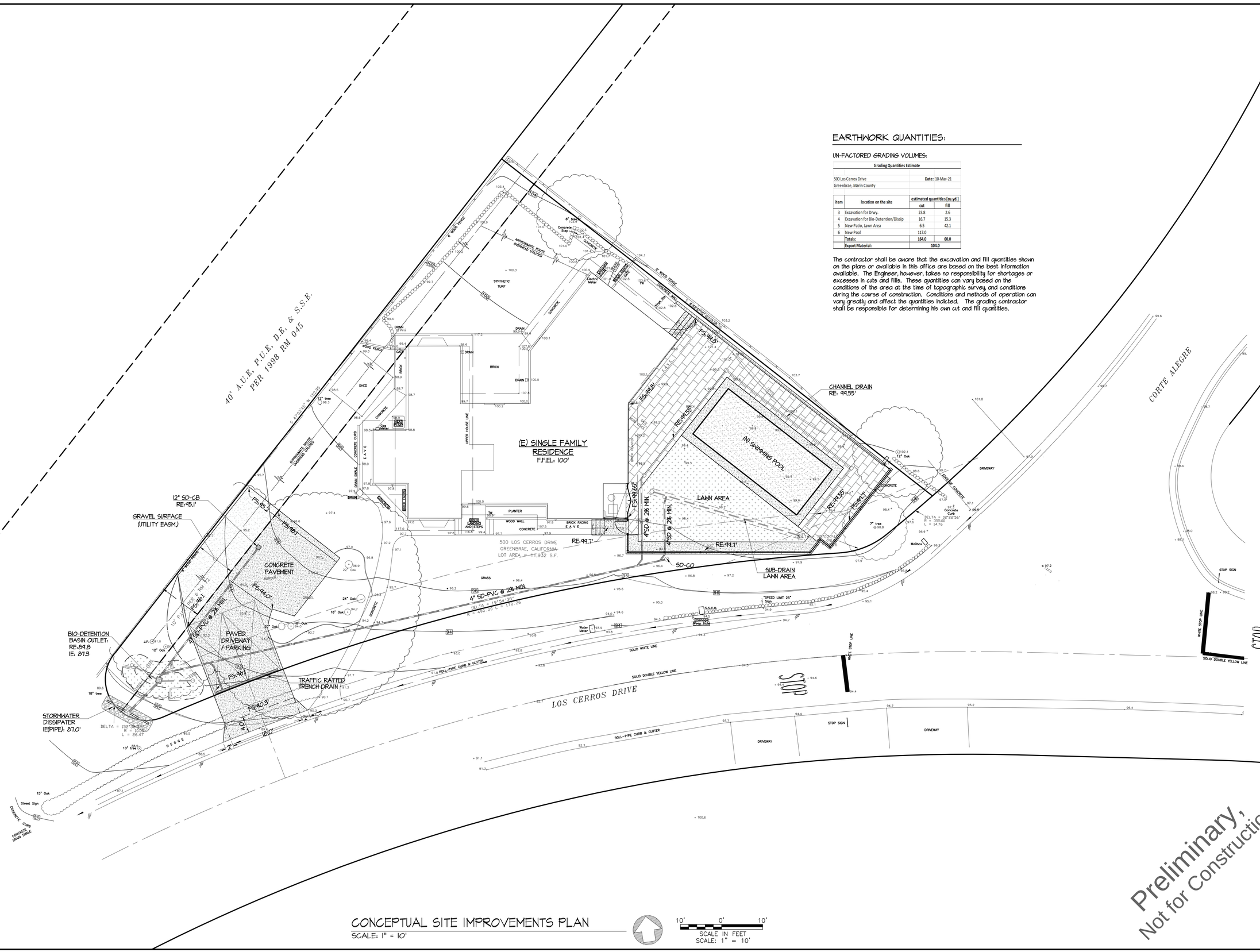

CONCEPTUAL SITE IMPROVEMENTS PLAN

SCALE: 1" = 10'

10' 0' 10'
SCALE IN FEET
SCALE: 1" = 10'

Preliminary, Not for Construction

ViA Atelier

Revisions: | Date: | By:

Sheet Title: SITE IMPROVEMENTS PLAN

Project: CHANG RESIDENCE

Address: 500 LOS CERROS DRIVE, GREENBRAE, CA 94904 (APN:070-061-21)

PROFESSIONAL ENGINEER — VLADIMIR G. IOJICA — C 73861 Exp. 6-30-21 — CIVIL — STATE OF CALIFORNIA

Plans Prepared By:
ViA Atelier, Inc.
Engineering Consultants
9 Brookside Ct., San Anselmo, CA 94960
Ph:(415) 774-6776 E:vlad@via-eng.com

JOB NO: 2101.b

DATE: 03.17.'21

Drawn by: p.y.
Reviewed by: v.i.

SHEET:

C4.0

5 OF 6

D:\VIA\2101b_500 Los cerros Drive, Greenbrae\CAD\C4D.dwg Plotted by: Vlad Iojica Mar 17, 2021 10:58am

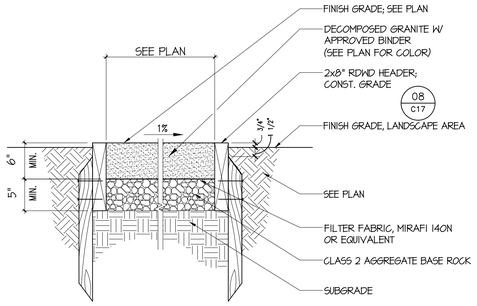

NOTE:
1. TREAT AREA UNDER PAVING W/ PRE-EMERGENT HERBICIDE.
2. CLASS 2 AGGREGATE BASE ROCK AND SUBGRADE TO BE COMPACTED TO A MIN. OF 95% PER ASTM TEST D1557 AND FIELD TESTED BY THE GEOTECHNICAL ENGINEER .

7 DECOMPOSED GRANITE PAVING

NADA FILE NAME: PV-DG DRAWN BY: DR.

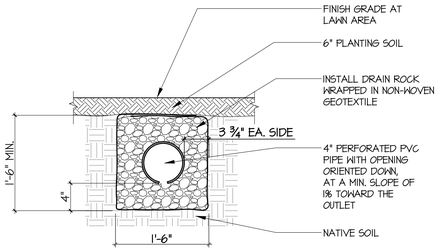

SUB-SURFACE DRAIN AT CRAWL SPACE

4 SLAB SUB-DRAIN

SCALE: N.T.S. FILE NAME: CONN. DS DRAWN BY: V.I.

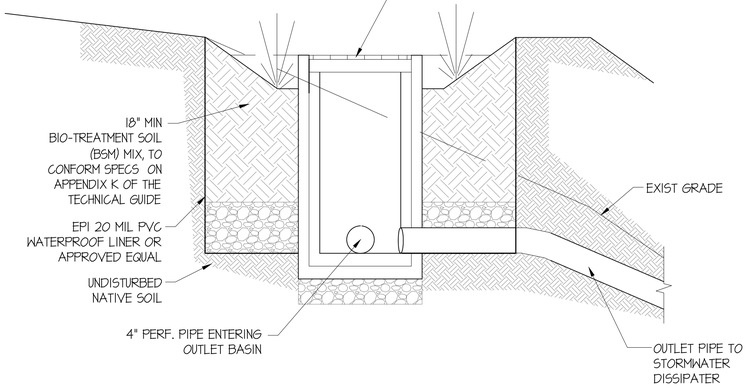

5 BIO-DETENTION BASIN

SCALE: N.T.S. FILE NAME: SW-21 DRAWN BY: V.I.

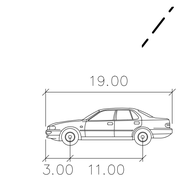

	feet
Width	: 7.00
Track	: 6.00
Lock to Lock Time	: 6.0
Steering Angle	: 31.6

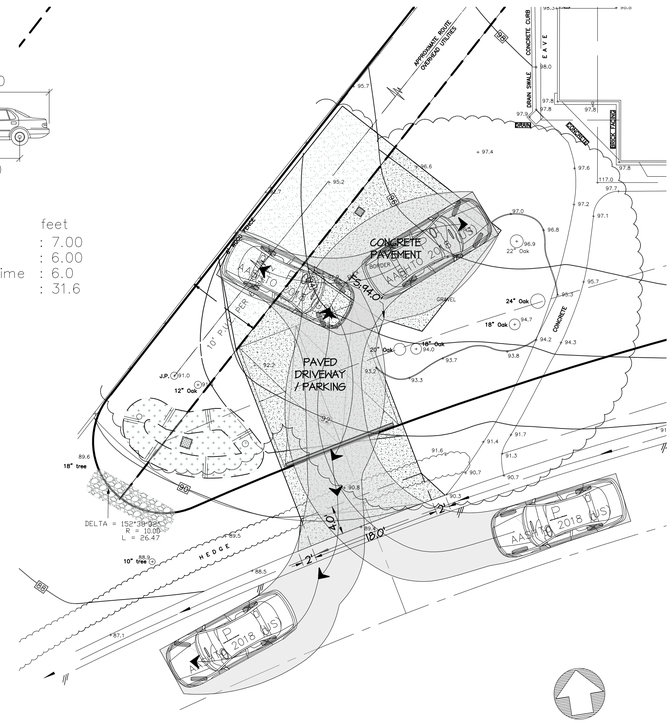

MANEUVERABILITY STUDY FOR NEW DRIVEWAY

SCALE: 1" = 10'

10' 0' 10'
SCALE IN FEET
SCALE: 1" = 10'

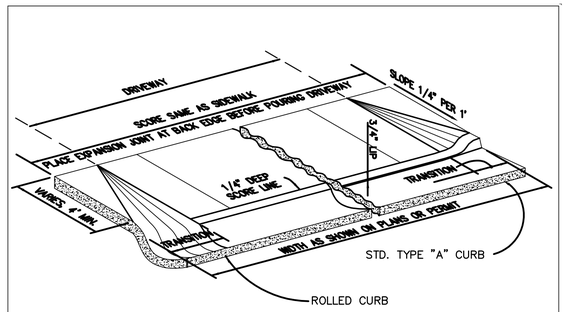

TYPE	TRANSITION WIDTH FROM DRIVEWAY PROJECTION TO OUTER EDGE OF APPROACH	THICKNESS
RESIDENTIAL	2' MIN.	6"
COMMERCIAL	4' MIN.	8"

NOTES:
1. SEE DRAWING NO. 100 FOR GENERAL NOTES.
2. THIS DRIVEWAY STANDARD MAY ONLY BE USED WHERE ANY EXISTING SIDEWALKS (OR PATHWAYS) ARE LOCATED MORE THAN 48" FROM BACK OF CURB (OR EDGE OF PAVEMENT).

UNIFORM STANDARDS ALL CITIES AND COUNTY OF MARIN	DRIVEWAY APPROACH ROLLED CURB AND STANDARD CURB	REV.	DATE	BY	MAY 2008
					DWG. NO. 130

Preliminary, Not for Construction

ViA Atelier

By:
Date:
Revisions:

Sheet Title: SECTIONS & DETAILS

Project: CHANG RESIDENCE

Address: 500 LOS CERROS DRIVE, GREENBRAE, CA 94904 (APN:070-061-21)

PROFESSIONAL ENGINEER VLAD G. IOJICA C 73861 Exp. 6-30-21 CIVIL STATE OF CALIFORNIA REGISTERED

Plans Prepared By:
ViA Atelier, Inc.
Engineering Consultants
9 Brookside Ct., San Anselmo, CA 94960
Ph:(415) 774-6776 E:vlad@via-eng.com

JOB NO: 2101.b

DATE: 03.17.'21

Drawn by: p.y.
Reviewed by: v.i.

SHEET:

C5.0
6 OF 6

D:\VIA\2101b_500 Los cerros Drive, Greenbrae\CAD\C50.dwg Plotted by: Vlad Iojica Mar 17, 2021 11:10am