MILLER PACIFIC
ENGINEERING GROUP

ENGINEERING CALCULATIONS

Tied Back Drilled Pier Wall
Bluff Stabilization
190 Ocean Parkway
APN: 192-231-03
Bolinas, California

RECEIVED

MAY 14 2019

COUNTY OF MARIN
COMMUNITY DEVELOPMENT AGENCY
PLANNING DIVISION

Prepared for:

Mr. Tom Bassett
501 Mariposa Street, Suite 426
San Francisco, California 94107

Project No. 2703.001

October 11, 2018

Prepared by:
MILLER PACIFIC ENGINEERING GROUP
(a California corporation)

REGISTERED PROFESSIONAL ENGINEER
SCOTT L. MEYERS
No. C 87895
Exp. 9/30/19
CIVIL
STATE OF CALIFORNIA

Scott L. Meyers
Civil Engineer No. 87895
(Expires 9/30/19)

REVIEWED BY:

REGISTERED PROFESSIONAL ENGINEER
SCOTT A. STEPHENS
2398
Exp. 6/30/19
GEOTECHNICAL
STATE OF CALIFORNIA

Scott Stephens
Geotechnical Engineer No. 2398
(Expires 6/30/17)

Engineering Calculations,
MPEG Job No 2703.001
October 11, 2018

TIED BACK DRILLED PIER WALL DESIGN CRITERIA

The design parameters for the tied back drilled pier wall are as follows. The project is to install a drilled pier and grade beam system that can be converted into a tied back retaining wall as the bluff retreats in Bolinas, California. Based on our subsurface investigation performed on July 26th, 2018 and our geotechnical experience, we have developed the following design criteria.

Design Criteria:

- Wall designed for loading case = 1.6 * Lateral Earth pressures + 1.0 * Earthquake.
- Active pressure = 40 pcf equivalent fluid pressure for level backfill condition
- Passive pressure:
  - Soil = 200 pcf equivalent fluid pressure for 1.5:1 sloping downhill condition
  - Rock = 500 pcf equivalent fluid pressure for level downhill condition with maximum of 5,000 psf.
  - Rock = 300 pcf equivalent fluid pressure for 1.5:1 sloping downhill condition with maximum of 5,000 psf.
- Seismic pressure = 15*H psf (H = height of wall) (Note: shoring suite values are divided by 1.6 to cancel out factor of 1.6 applied to all pressures.)
- Tieback skin friction = 1,250 psf

The following pages contain calculations for design of the tied back drilled pier wall. The calculations include the following:

- Shoring Suite Results
  - 7-ft Cantilever Static and Seismic
  - 15-ft Single Tied Back Static and Seismic
  - 20-ft Double Tied Back Static and Seismic
- Drilled Pier Design
- Tieback Design
- Whaler Design
- Shotcrete Facing Design
  - 0- to 7-ft Shotcrete Facing and Connection Design
  - 7- to 15-ft Shotcrete Facing and Connection Design
  - 15- to 20-ft Shotcrete Facing and Connection Design
- Boring Logs

7-ft Cantilever Wall
Static Design
(Shoring Suite)

2703.001 - 190 Ocean Parkway
7-ft Retained

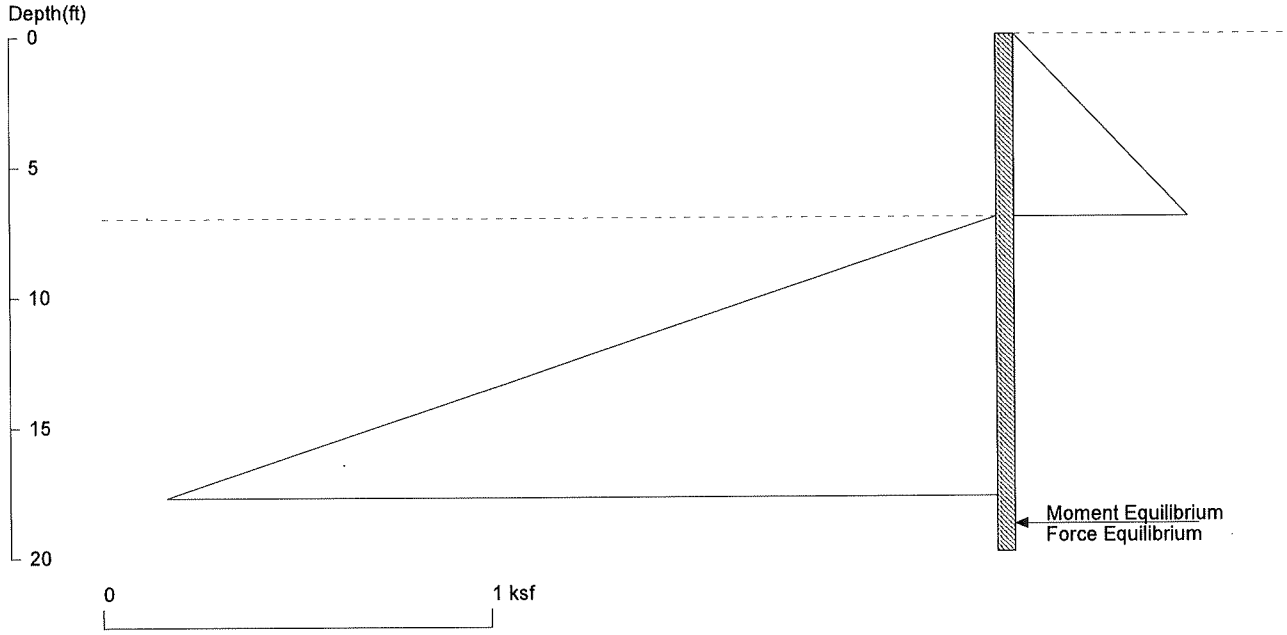

<ShoringSuite> CIVILTECH SOFTWARE USA www.civiltech.com

Licensed to 4324324234 3424343 Date: 9/10/2018
File: H:\Jobs\2700-2799\2703.001 190 Ocean Parkway\Analyses\7-ft.sh8

Wall Height=7.0 Pile Diameter=1.5 Pile Spacing=6.0 Wall Type: 2. Soldier Pile, Drilled

PILE LENGTH: Min. Embedment=12.85 Min. Pile Length=19.85
MOMENT IN PILE: Max. Moment=57.08 per Pile Spacing=6.0 at Depth=12.61

VERTICAL BEARING CAPACITY: Vertical Loading=0.0, Resistance=38.5, Vertical Factor of Safety=999.00

PILE SELECTION:
Request Min. Section Modulus = 20.8 in3/pile=340.11 cm3/pile, Fy= 50 ksi = 345 MPa, Fb/Fy=0.66
-> Piles meet Min. Section Requirements: Top Deflection is shown in (in)
HP8X36 (0.93) W8X24 (1.34) HP10X42 (0.53) W10X22 (0.94) HP12X53 (0.28)
W12X19 (0.85) HP13X60 (0.22) HP14X73 (0.15) W14X22 (0.56) W16X26 (0.37)
HP16X88 (0.10) W16X89 (0.09) HP16X101 (0.09) W16X100 (0.07)

DRIVING PRESSURES (ACTIVE, WATER, & SURCHARGE): Pressures below will be multiplied by a Factor =1.6

Z1	P1	Z2	P2	Slope
0	0	7	0.280	.04

PASSIVE PRESSURES:

Z1	P1	Z2	P2	Slope
7	0	20	2.600	0.20

ACTIVE SPACING:

No.	Z depth	Spacing
1	0.00	6.00
2	7.00	1.50

PASSIVE SPACING:

No.	Z depth	Spacing
1	7.00	3.00

UNITS: Width,Spacing,Diameter,Length,and Depth - ft; Force - kip; Moment - kip-ft
Friction,Bearing,and Pressure - ksf; Pres. Slope - kip/ft3; Deflection - in

2703.001 - 190 Ocean Parkway
7-ft Retained

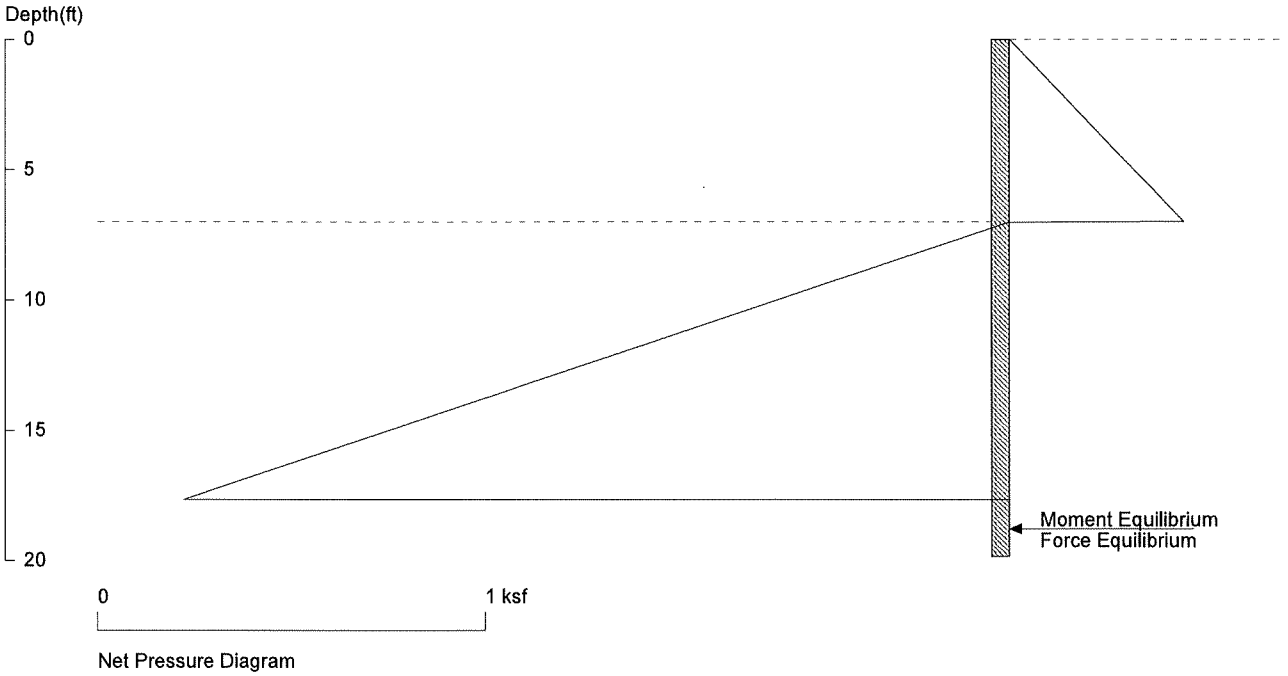

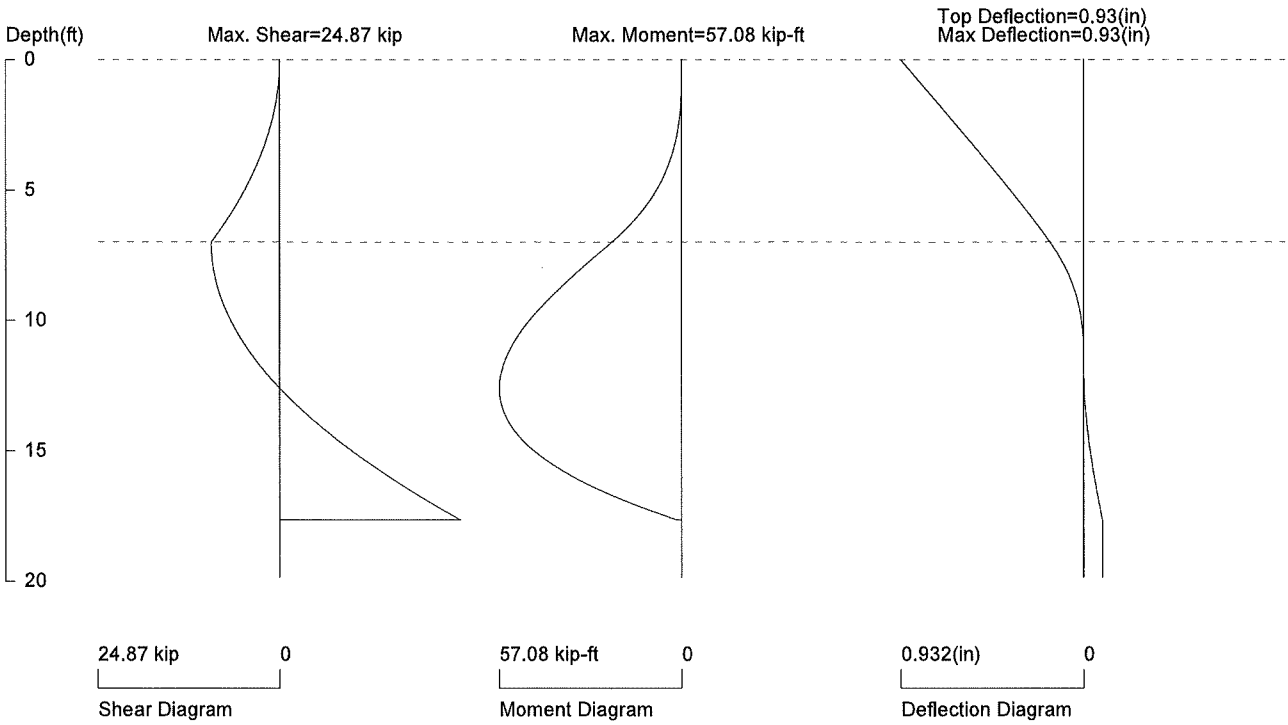

PRESSURE, SHEAR, MOMENT, AND DEFLECTION DIAGRAMS

Based on pile spacing: 6.0 foot or meter

First Suitable Pile: HP8X36: E (ksi)=29000.0, I (in4)/pile=119.0

File: H:\Jobs\2700-2799\2703.001 190 Ocean Parkway\Analyses\7-ft.sh8

7-ft Cantilever Wall
Seismic Design
(Shoring Suite)

2703.001 - 190 Ocean Parkway
7-ft Retained Seismic

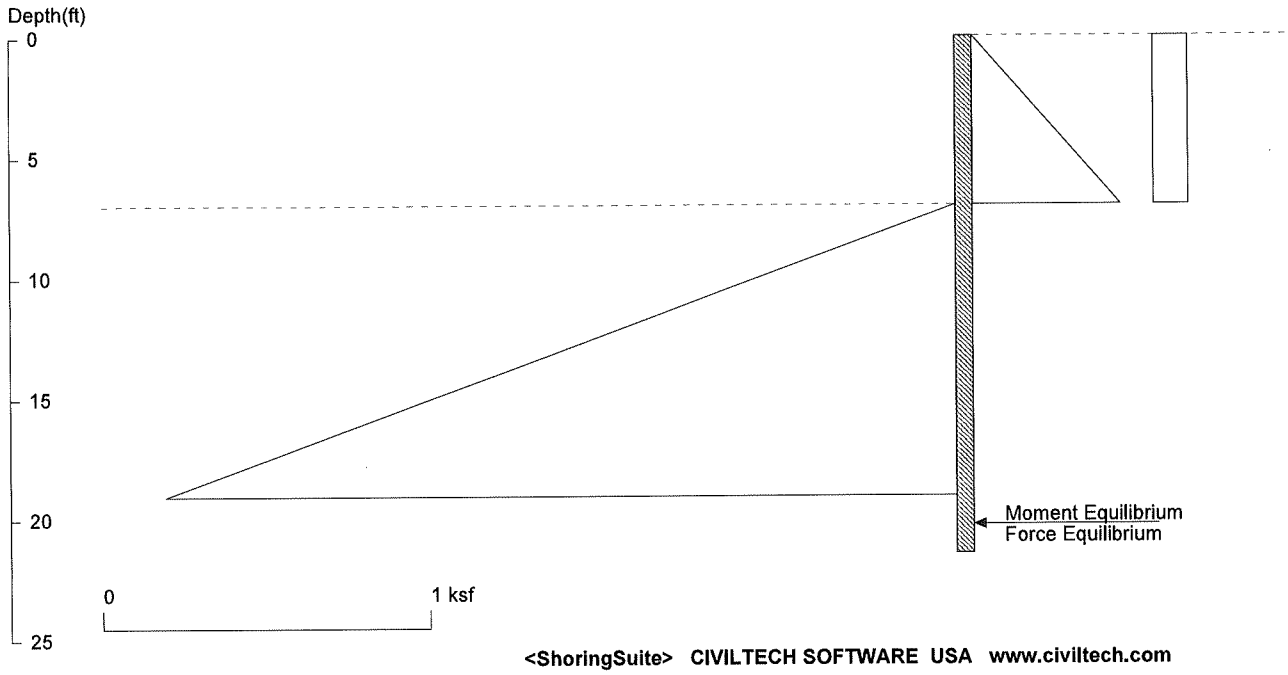

<ShoringSuite> CIVILTECH SOFTWARE USA www.civiltech.com

Licensed to 4324324234 3424343 Date: 9/10/2018
File: H:\Jobs\2700-2799\2703.001 190 Ocean Parkway\Analyses\7-ft Seismic.sh8

Wall Height=7.0 Pile Diameter=1.5 Pile Spacing=6.0 Wall Type: 2. Soldier Pile, Drilled

PILE LENGTH: Min. Embedment=14.46 Min. Pile Length=21.46
MOMENT IN PILE: Max. Moment=83.77 per Pile Spacing=6.0 at Depth=13.18

VERTICAL BEARING CAPACITY: Vertical Loading=0.0, Resistance=42.3, Vertical Factor of Safety=999.00

PILE SELECTION:
Request Min. Section Modulus = 30.5 in3/pile=499.17 cm3/pile, Fy= 50 ksi = 345 MPa, Fb/Fy=0.66
-> Piles meet Min. Section Requirements: Top Deflection is shown in (in)
W8X35 (1.50) HP10X42 (0.91) W10X30 (1.12) HP12X53 (0.48) W12X26 (0.93)
HP13X60 (0.38) HP14X73 (0.26) W14X26 (0.78) W16X26 (0.63) HP16X88 (0.17)
W16X89 (0.15) HP16X101 (0.15) W16X100 (0.13) HP16X121 (0.12)

DRIVING PRESSURES (ACTIVE, WATER, & SURCHARGE): Pressures below will be multiplied by a Factor =1.6

Z1	P1	Z2	P2	Slope
0	0	7	0.280	.04
0	.066	7	0.066	0

PASSIVE PRESSURES:

Z1	P1	Z2	P2	Slope
7	0	20	2.600	0.20
20	2.6	24.8	5.000	.5

ACTIVE SPACING:

No.	Z depth	Spacing
1	0.00	6.00
2	6.00	1.50

PASSIVE SPACING:

No.	Z depth	Spacing
1	6.00	3.00

UNITS: Width,Spacing,Diameter,Length,and Depth - ft; Force - kip; Moment - kip-ft
Friction,Bearing,and Pressure - ksf; Pres. Slope - kip/ft3; Deflection - in

2703.001 - 190 Ocean Parkway
7-ft Retained Seismic

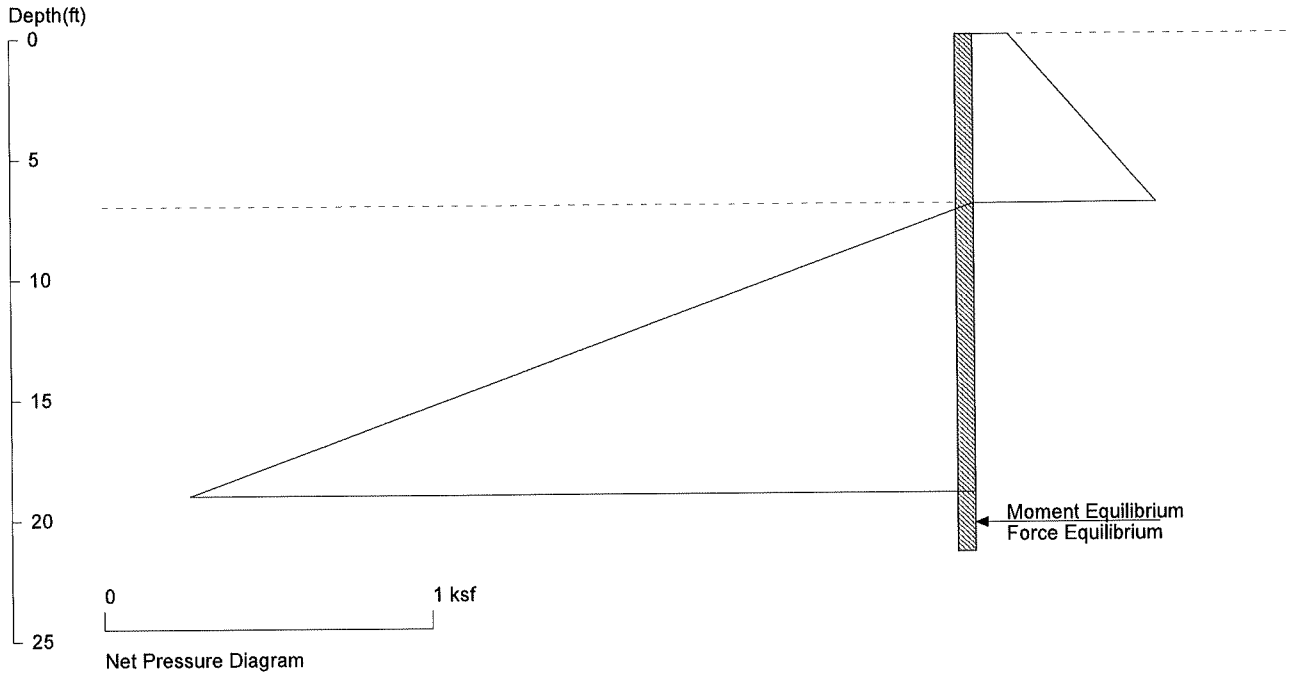

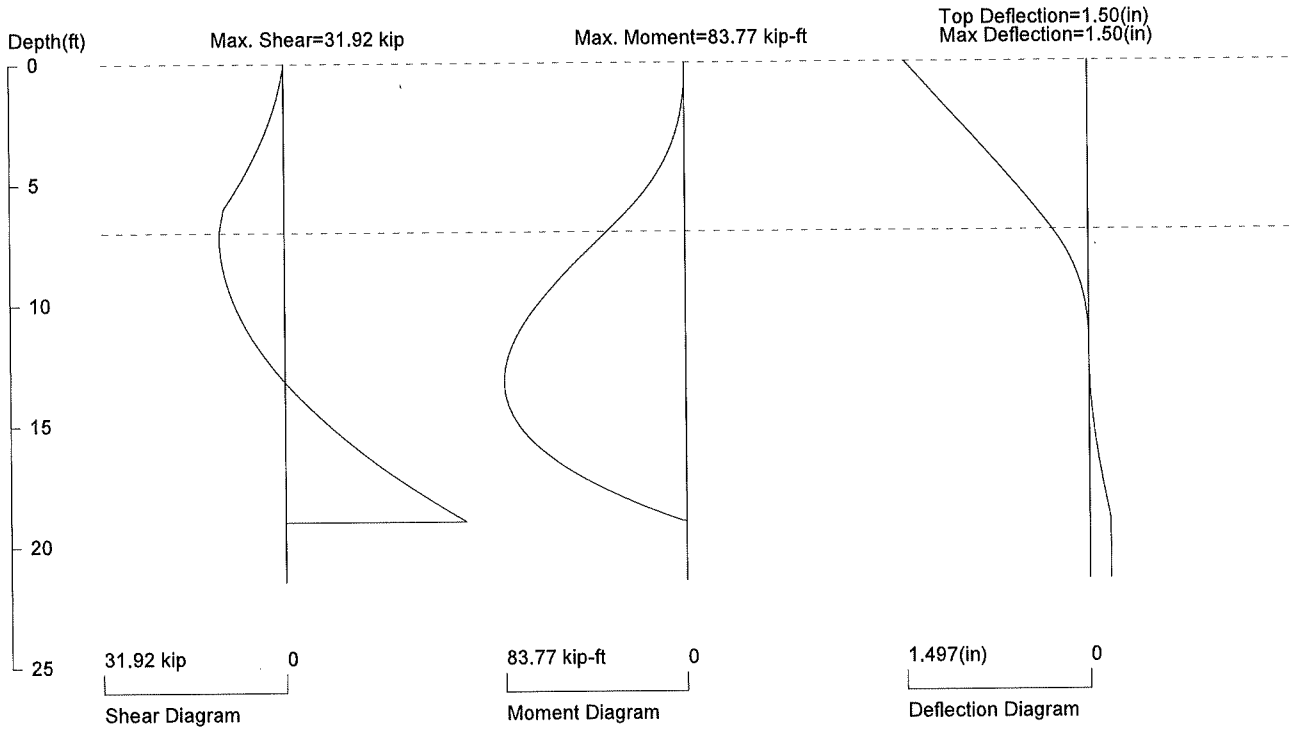

PRESSURE, SHEAR, MOMENT, AND DEFLECTION DIAGRAMS

Based on pile spacing: 6.0 foot or meter

First Suitable Pile: W8X35: E (ksi)=29000.0, I (in4)/pile=127.0

File: H:\Jobs\2700-2799\2703.001 190 Ocean Parkway\Analyses\7-ft Seismic.sh8

<ShoringSuite> CIVILTECH SOFTWARE USA www.civiltech.com

Licensed to 4324324234 3424343

15-ft Single Tied Back Wall
Static Design
(Shoring Suite)

2703.001 - 190 Ocean Parkway
15-ft Retained

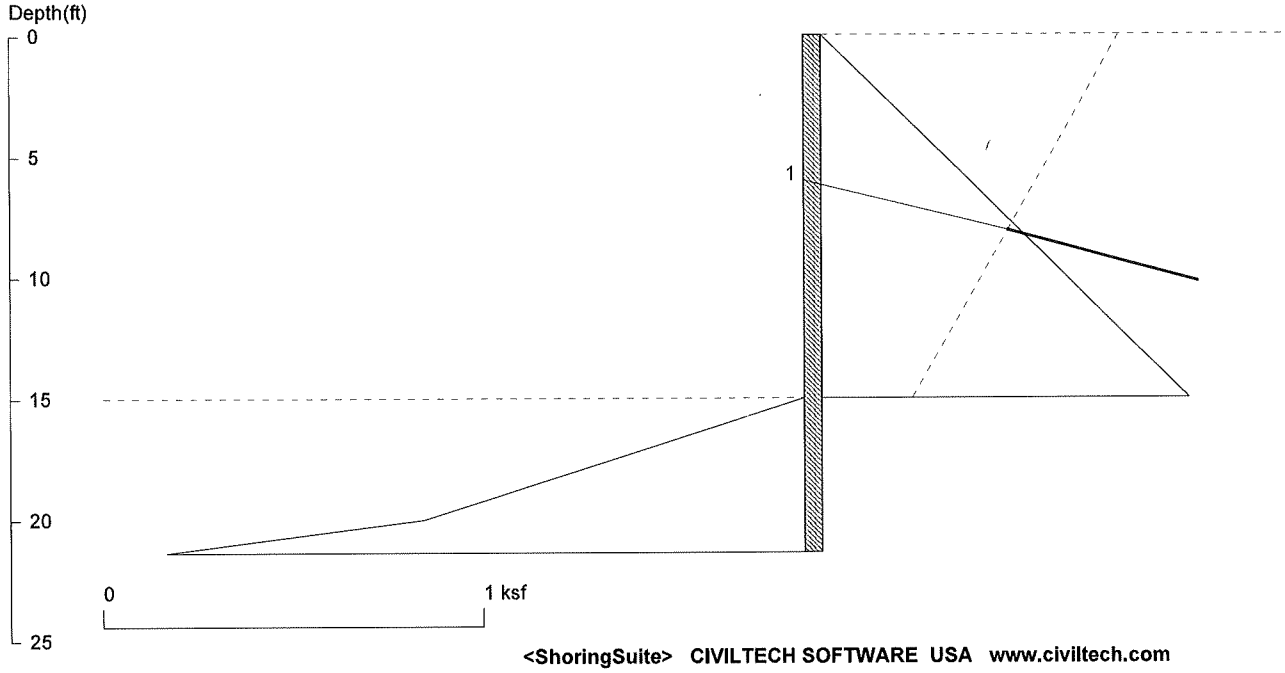

Licensed to 4324324234 3424343 Date: 9/10/2018
File: H:\Jobs\2700-2799\2703.001 190 Ocean Parkway\Analyses\15-ft.sh8

Wall Height=15.0 Pile Diameter=1.5 Pile Spacing=6.0 Wall Type: 2. Soldier Pile, Drilled

PILE LENGTH: Min. Embedment=6.36 Min. Pile Length=21.36
MOMENT IN PILE: Max. Moment=71.64 per Pile Spacing=6.0 at Depth=12.55

VERTICAL BEARING CAPACITY: Vertical Loading=8.1, Resistance=32.7, Vertical Factor of Safety=4.03

PILE SELECTION:
Request Min. Section Modulus = 26.0 in3/pile=426.87 cm3/pile, Fy= 50 ksi = 345 MPa, Fb/Fy=0.66
-> Piles meet Min. Section Requirements: Top Deflection is shown in (in)
HP8X36 (-0.84) W8X31 (-0.91) HP10X42 (-0.48) W10X26 (-0.70) HP12X53 (-0.26)
W12X26 (-0.49) HP13X60 (-0.20) HP14X73 (-0.14) W14X22 (-0.50) W16X26 (-0.33)
HP16X88 (-0.09) W16X89 (-0.08) HP16X101 (-0.08) W16X100 (-0.07)

BRACE FORCE: Strut, Tieback, Plate Anchor, Deadman, Sheet Pile as Anchor

No. & Type	Depth	Angle	Space	Total F.	Horiz. F.	Vert. F.	L_free	Fixed Length
1. Tieback	6.0	15.0	12.0	62.6	60.5	16.2	8.0	39.9

UNITS: Width,Diameter,Spacing,Length,Depth,and Height - ft; Force - kip; Bond Strength and Pressure - ksf

DRIVING PRESSURES (ACTIVE, WATER, & SURCHARGE): Pressures below will be multiplied by a Factor =1.6

Z1	P1	Z2	P2	Slope
0	0	15	0.600	.04

PASSIVE PRESSURES:

Z1	P1	Z2	P2	Slope
15	0	20	1.000	0.2
20	1	28	5.000	0.5

ACTIVE SPACING:

No.	Z depth	Spacing
1	0.00	6.00
2	15.00	1.50

PASSIVE SPACING:

No.	Z depth	Spacing
1	15.00	3.00

UNITS: Width,Spacing,Diameter,Length,and Depth - ft; Force - kip; Moment - kip-ft
Friction,Bearing,and Pressure - ksf; Pres. Slope - kip/ft3; Deflection - in

2703.001 - 190 Ocean Parkway
15-ft Retained

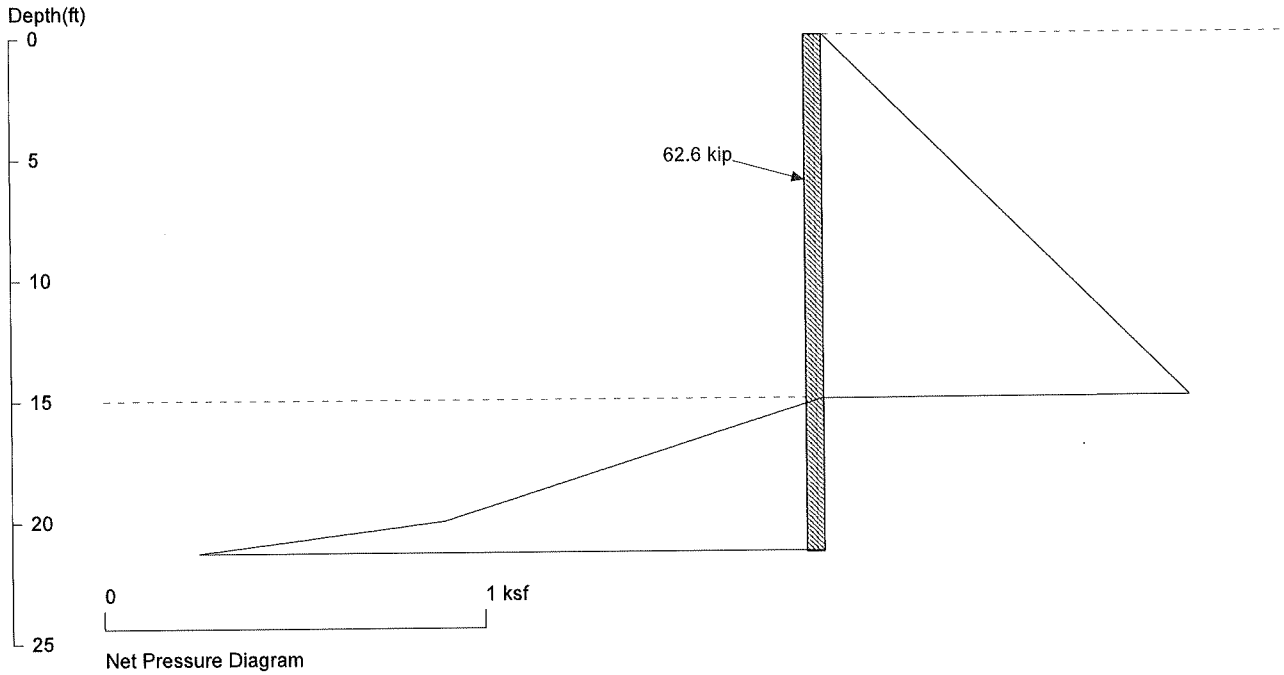

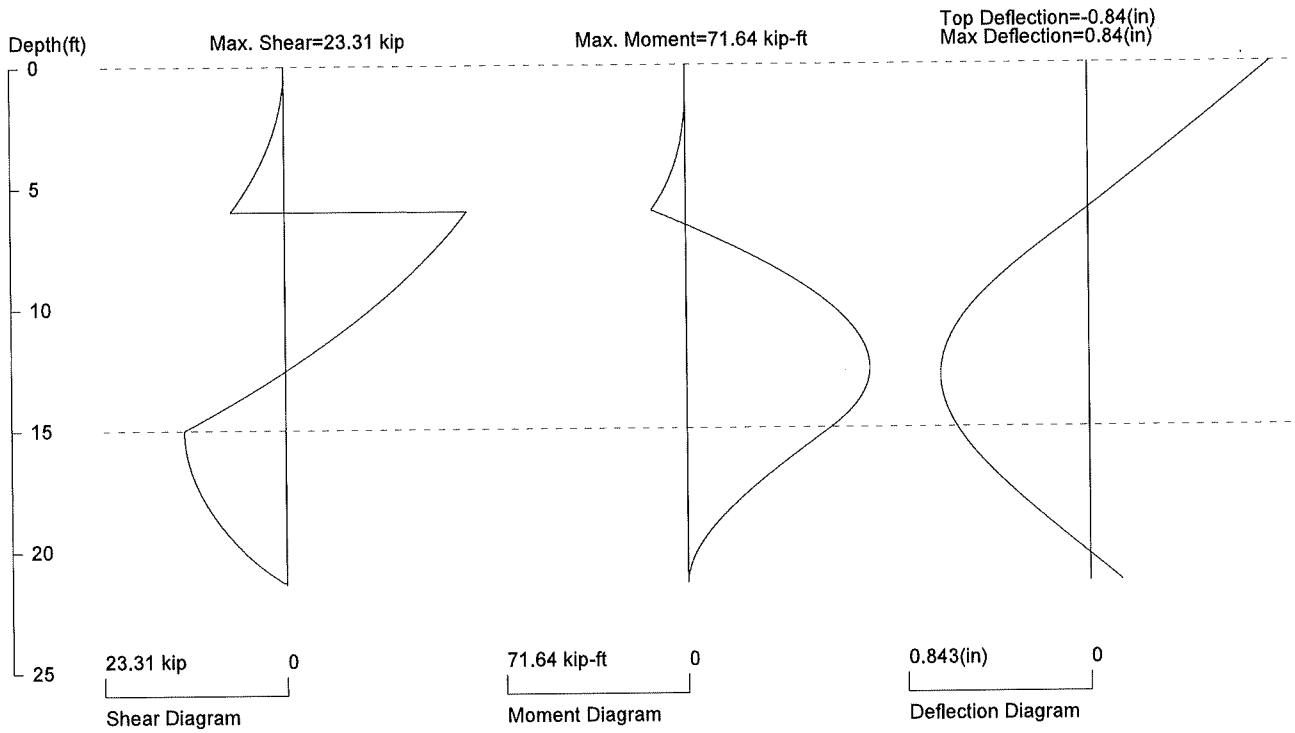

PRESSURE, SHEAR, MOMENT, AND DEFLECTION DIAGRAMS

Based on pile spacing: 6.0 foot or meter

First Suitable Pile: HP8X36: E (ksi)=29000.0, I (in4)/pile=119.0

File: H:\Jobs\2700-2799\2703.001 190 Ocean Parkway\Analyses\15-ft.sh8

<ShoringSuite> CIVILTECH SOFTWARE USA www.civiltech.com

Licensed to 4324324234 3424343

15-ft Single Tied Back Wall
Seismic Design
(Shoring Suite)

2703.001 - 190 Ocean Parkway
15-ft Retained Seismic

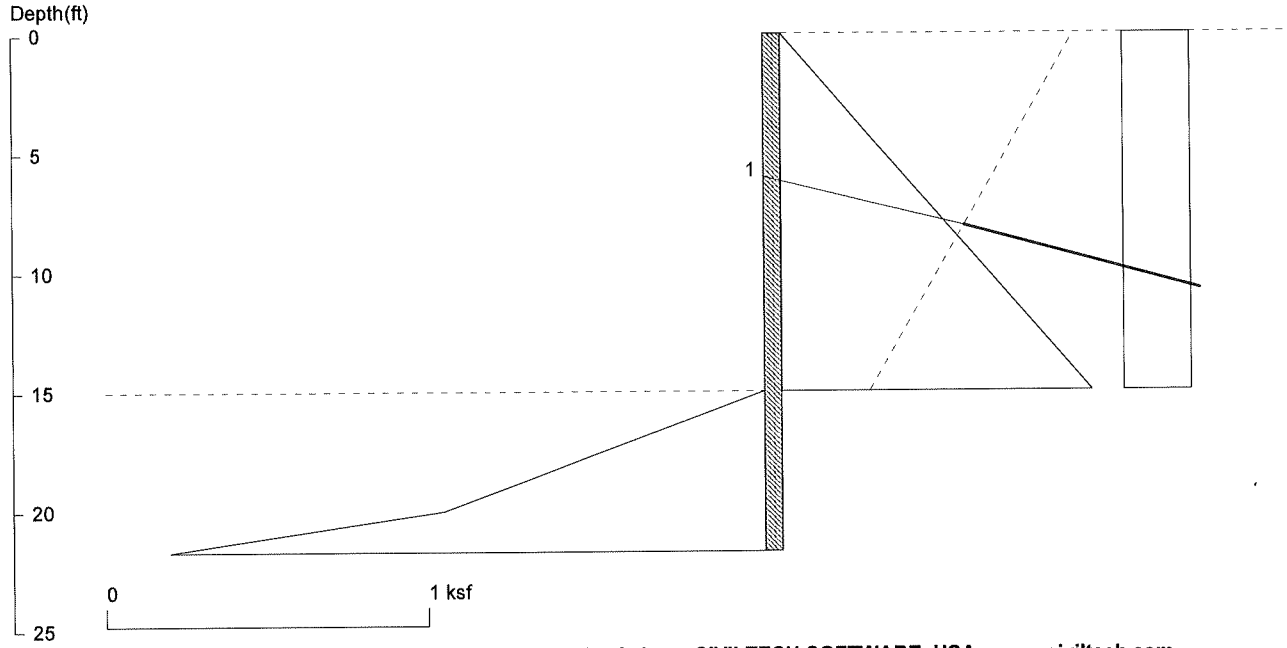

<ShoringSuite> CIVILTECH SOFTWARE USA www.civiltech.com

Licensed to 4324324234 3424343 Date: 9/10/2018
File: H:\Jobs\2700-2799\2703.001 190 Ocean Parkway\Analyses\15-ft Seismic.sh8

Wall Height=15.0 Pile Diameter=1.5 Pile Spacing=6.0 Wall Type: 2. Soldier Pile, Drilled

PILE LENGTH: Min. Embedment=6.70 Min. Pile Length=21.70
MOMENT IN PILE: Max. Moment=84.36 per Pile Spacing=6.0 at Depth=12.75

VERTICAL BEARING CAPACITY: Vertical Loading=12.7, Resistance=33.5, Vertical Factor of Safety=2.64

PILE SELECTION:
Request Min. Section Modulus = 30.7 in3/pile=502.67 cm3/pile, Fy= 50 ksi = 345 MPa, Fb/Fy=0.66
-> Piles meet Min. Section Requirements: Top Deflection is shown in (in)
W8X35 (-0.75) HP10X42 (-0.45) W10X30 (-0.56) HP12X53 (-0.24) W12X26 (-0.46)
HP13X60 (-0.19) HP14X73 (-0.13) W14X26 (-0.39) W16X26 (-0.31) HP16X88 (-0.09)
W16X89 (-0.07) HP16X101 (-0.07) W16X100 (-0.06) HP16X121 (-0.06)

BRACE FORCE: Strut, Tieback, Plate Anchor, Deadman, Sheet Pile as Anchor

No. & Type	Depth	Angle	Space	Total F.	Horiz. F.	Vert. F.	L_free	Fixed Length
1. Tieback	6.0	15.0	12.0	97.9	94.6	25.3	8.0	62.3

UNITS: Width,Diameter,Spacing,Length,Depth,and Height - ft; Force - kip; Bond Strength and Pressure - ksf

DRIVING PRESSURES (ACTIVE, WATER, & SURCHARGE): Pressures below will be multiplied by a Factor =1.6

Z1	P1	Z2	P2	Slope
0	0	15	0.600	.04
0	.131	15	0.131	0

PASSIVE PRESSURES:

Z1	P1	Z2	P2	Slope
15	0	20	1.000	0.2
20	1	28	5.000	0.5

ACTIVE SPACING:

No.	Z depth	Spacing
1	0.00	6.00
2	15.00	1.50

PASSIVE SPACING:

No.	Z depth	Spacing
1	15.00	3.00

UNITS: Width,Spacing,Diameter,Length,and Depth - ft; Force - kip; Moment - kip-ft
Friction,Bearing,and Pressure - ksf; Pres. Slope - kip/ft3; Deflection - in

2703.001 - 190 Ocean Parkway
15-ft Retained Seismic

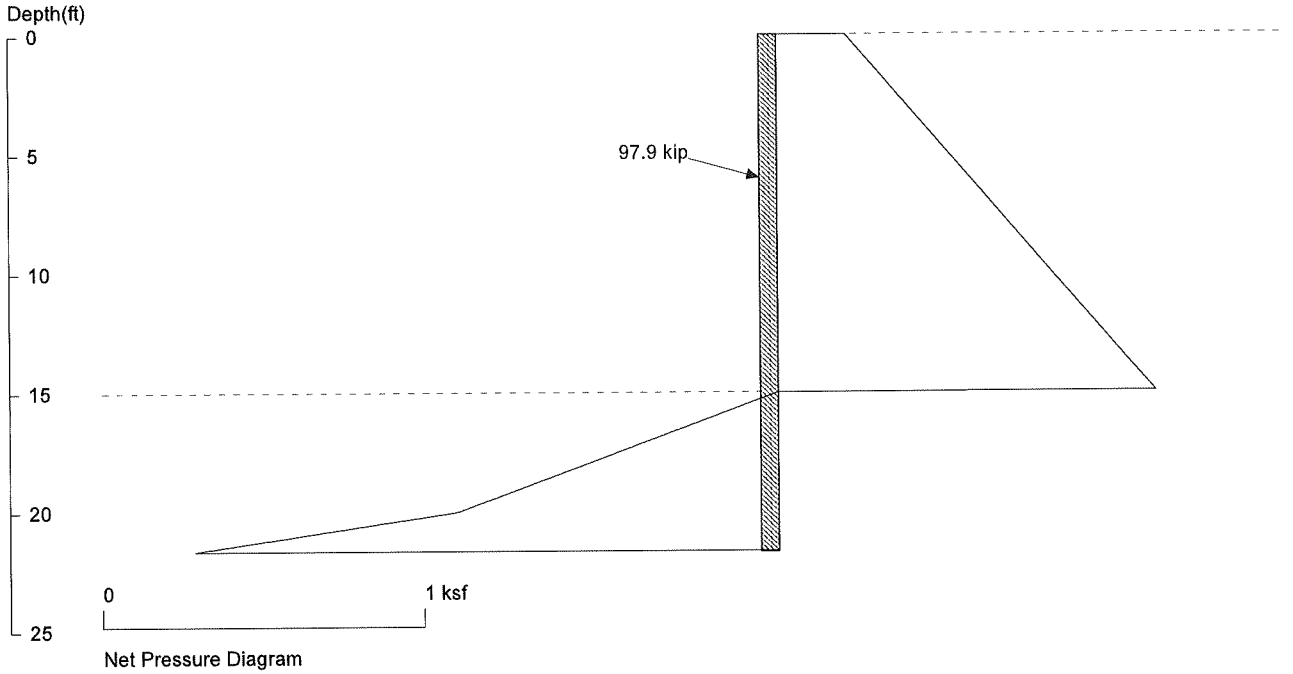

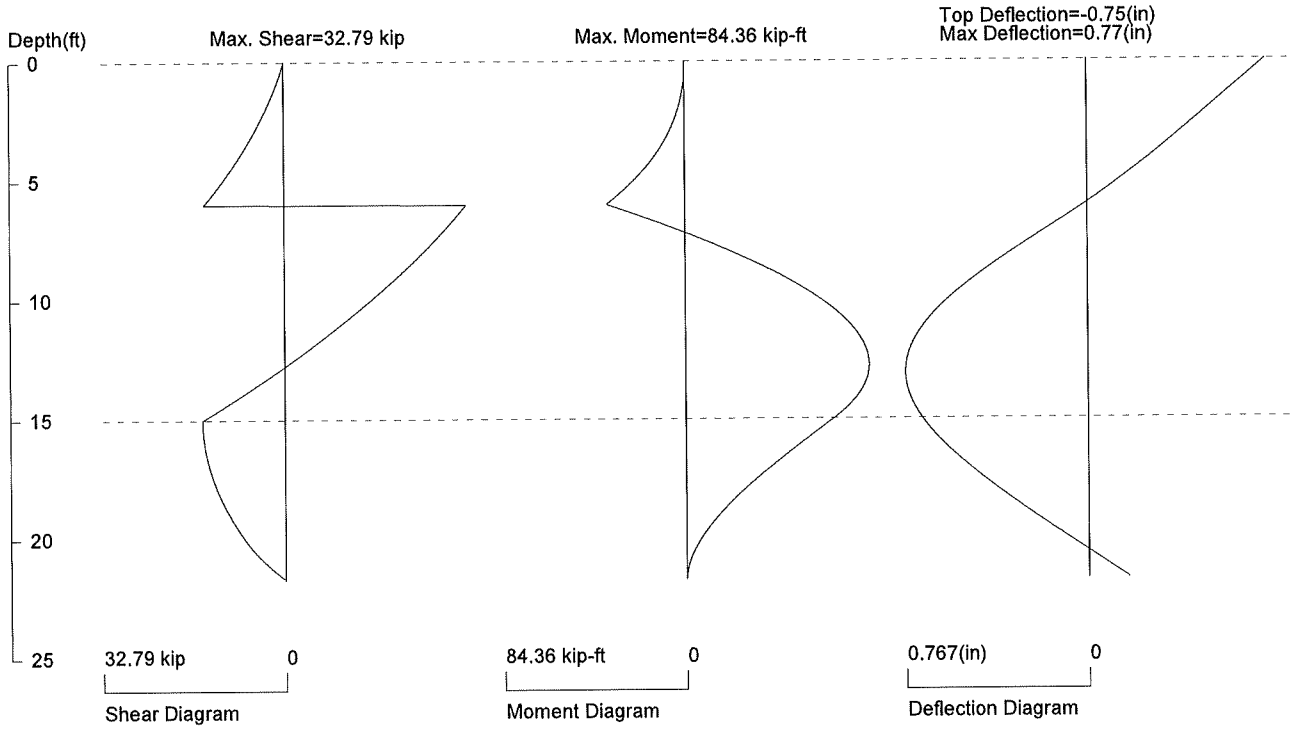

PRESSURE, SHEAR, MOMENT, AND DEFLECTION DIAGRAMS

Based on pile spacing: 6.0 foot or meter

First Suitable Pile: W8X35: E (ksi)=29000.0, I (in4)/pile=127.0

File: H:\Jobs\2700-2799\2703.001 190 Ocean Parkway\Analyses\15-ft Seismic.sh8

<ShoringSuite> CIVILTECH SOFTWARE USA www.civiltech.com

Licensed to 4324324234 3424343

20-ft Single Tied Back Wall
Static Design
(Shoring Suite)

2703.001 - 190 Ocean Parkway
20-ft Retained

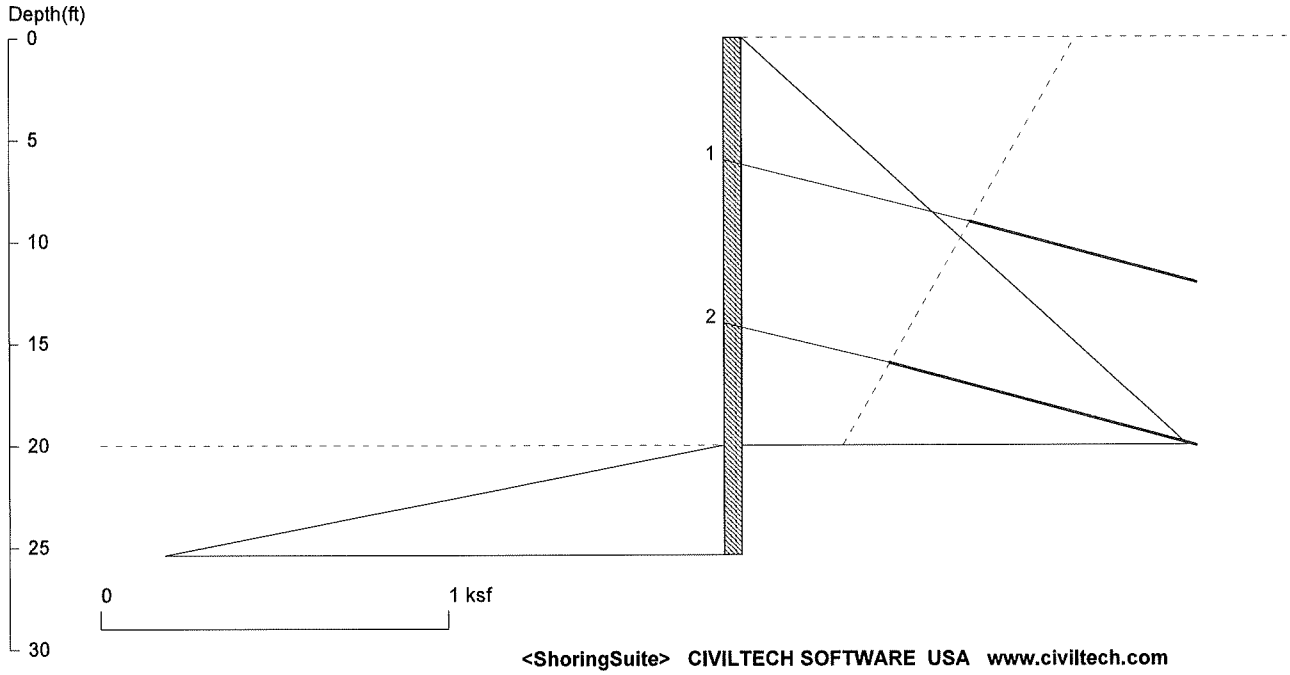

Licensed to 4324324234 3424343 Date: 10/1/2018
File: H:\Jobs\2700-2799\2703.001 190 Ocean Parkway\Analyses\20-ft.sh8

Wall Height=20.0 Pile Diameter=1.5 Pile Spacing=6.0 Wall Type: 2. Soldier Pile, Drilled

PILE LENGTH: Min. Embedment=5.37 Min. Pile Length=25.37
MOMENT IN PILE: Max. Moment=46.43 per Pile Spacing=6.0 at Depth=18.46

VERTICAL BEARING CAPACITY: Vertical Loading=18.0, Resistance=36.2, Vertical Factor of Safety=2.01

PILE SELECTION:
Request Min. Section Modulus = 16.9 in3/pile=276.65 cm3/pile, Fy= 50 ksi = 345 MPa, Fb/Fy=0.66
-> Piles meet Min. Section Requirements: Top Deflection is shown in (in)
HP8X36 (-0.02) W8X21 (-0.03) HP10X42 (-0.01) W10X19 (-0.02) HP12X53 (-0.01)
W12X16 (-0.02) HP13X60 (0.00) HP14X73 (0.00) W14X22 (-0.01) W16X26 (-0.01)
HP16X88 (0.00) W16X89 (0.00) HP16X101 (0.00) W16X100 (0.00)

BRACE FORCE: Strut, Tieback, Plate Anchor, Deadman, Sheet Pile as Anchor

No. & Type	Depth	Angle	Space	Total F.	Horiz. F.	Vert. F.	L_free	Fixed Length
1. Tieback	6.0	15.0	12.0	52.3*	50.5	13.5	11.7	33.3
2. Tieback	14.0	15.0	12.0	86.7	83.7	22.4	7.6	55.2

* Top Brace increased by 15% (DM7.2-103)
UNITS: Width,Diameter,Spacing,Length,Depth,and Height - ft; Force - kip; Bond Strength and Pressure - ksf

DRIVING PRESSURES (ACTIVE, WATER, & SURCHARGE): Pressures below will be multiplied by a Factor =1.6

Z1	P1	Z2	P2	Slope
0	0	20	0.800	.04

PASSIVE PRESSURES:

Z1	P1	Z2	P2	Slope
20	0	36.66	5.000	0.3

ACTIVE SPACING:

No.	Z depth	Spacing
1	0.00	6.00
2	20.00	1.50

PASSIVE SPACING:

No.	Z depth	Spacing
1	20.00	3.00

UNITS: Width,Spacing,Diameter,Length,and Depth - ft; Force - kip; Moment - kip-ft
Friction,Bearing,and Pressure - ksf; Pres. Slope - kip/ft3; Deflection - in

2703.001 - 190 Ocean Parkway
20-ft Retained

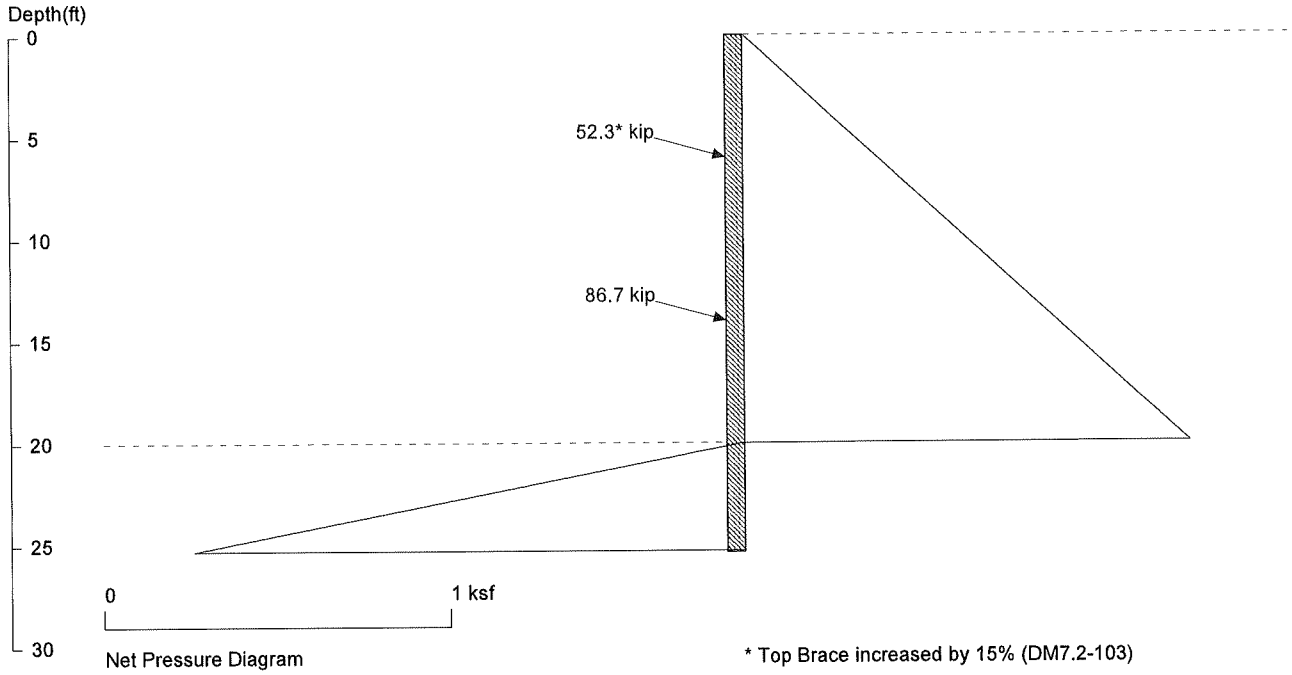

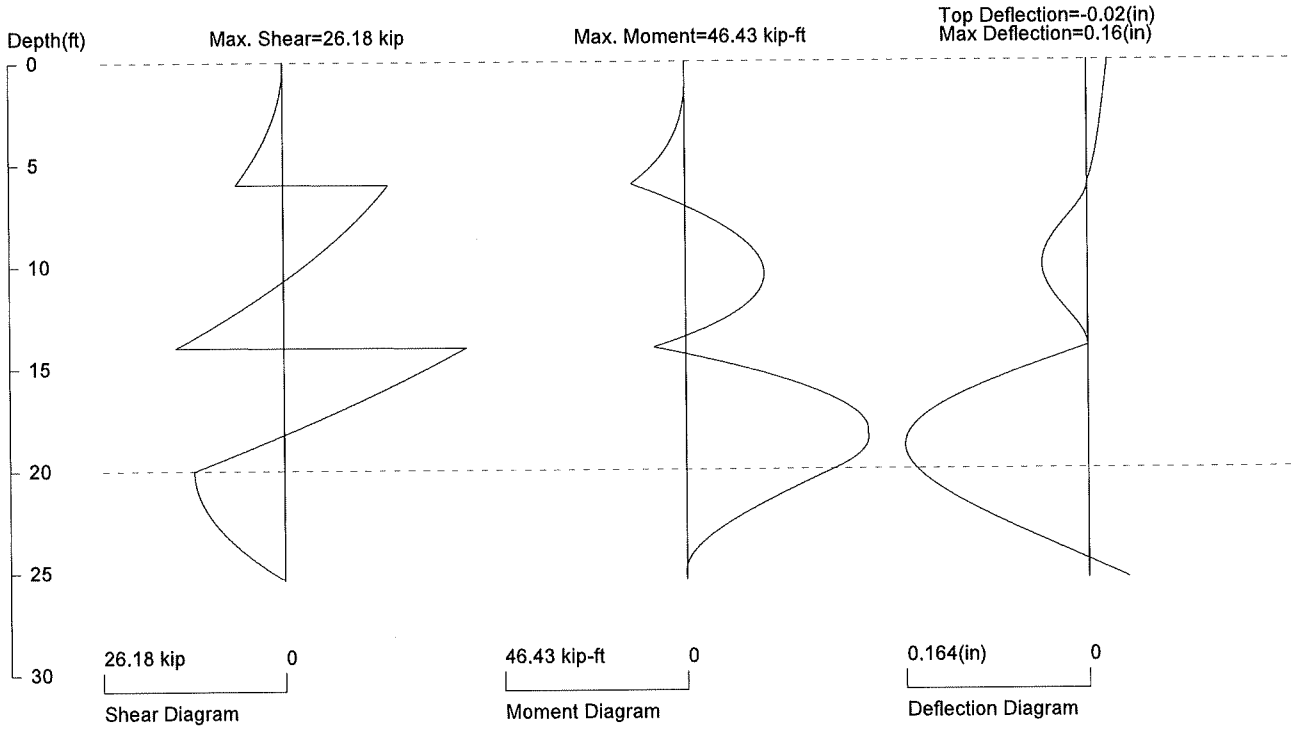

PRESSURE, SHEAR, MOMENT, AND DEFLECTION DIAGRAMS

Based on pile spacing: 6.0 foot or meter

First Suitable Pile: HP8X36: E (ksi)=29000.0, I (in4)/pile=119.0

File: H:\Jobs\2700-2799\2703.001 190 Ocean Parkway\Analyses\20-ft.sh8

<ShoringSuite> CIVILTECH SOFTWARE USA www.civiltech.com

Licensed to 4324324234 3424343

20-ft Single Tied Back Wall
Seismic Design
(Shoring Suite)

2703.001 - 190 Ocean Parkway
20-ft Retained Seismic

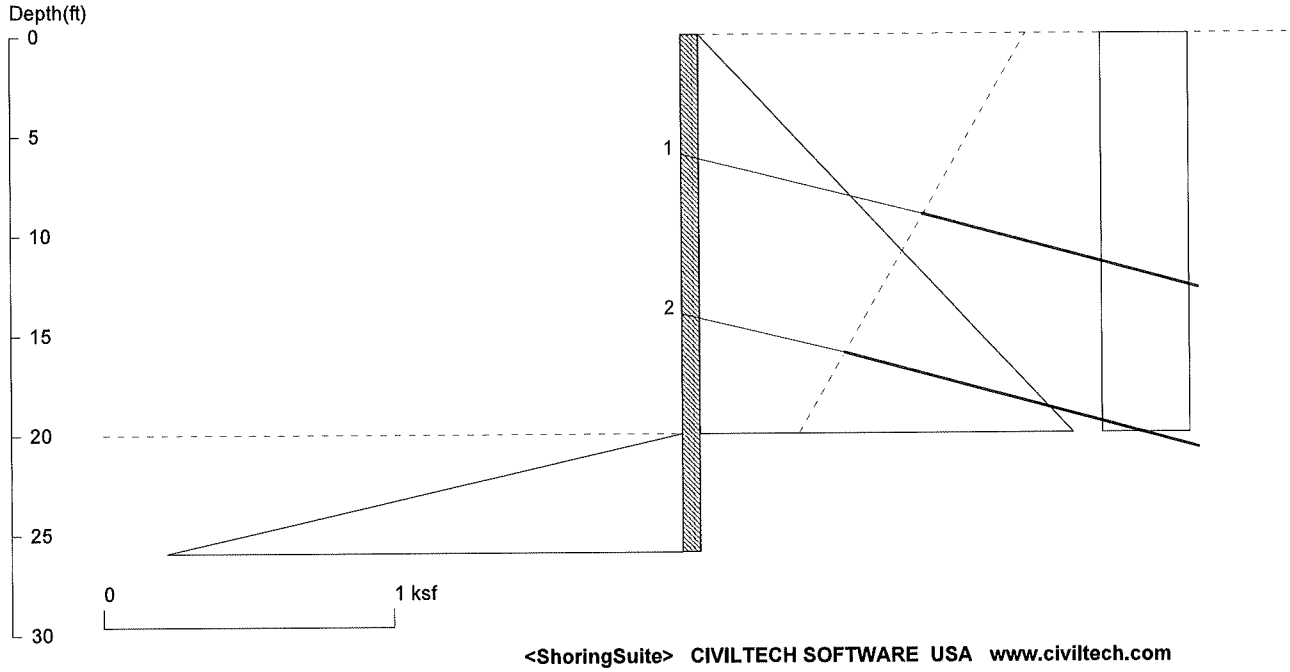

<ShoringSuite> CIVILTECH SOFTWARE USA www.civiltech.com

Licensed to 4324324234 3424343 Date: 10/1/2018
File: H:\Jobs\2700-2799\2703.001 190 Ocean Parkway\Analyses\20-ft seismic.sh8

Wall Height=20.0 Pile Diameter=1.5 Pile Spacing=6.0 Wall Type: 2. Soldier Pile, Drilled

PILE LENGTH: Min. Embedment=5.92 Min. Pile Length=25.92
MOMENT IN PILE: Max. Moment=60.72 per Pile Spacing=6.0 at Depth=18.51

VERTICAL BEARING CAPACITY: Vertical Loading=27.8, Resistance=37.5, Vertical Factor of Safety=1.35

PILE SELECTION:
Request Min. Section Modulus = 22.1 in3/pile=361.81 cm3/pile, Fy= 50 ksi = 345 MPa, Fb/Fy=0.66
-> Piles meet Min. Section Requirements: Top Deflection is shown in (in)
HP8X36 (0.19) W8X28 (0.24) HP10X42 (0.11) W10X22 (0.20) HP12X53 (0.06)
W12X22 (0.15) HP13X60 (0.05) HP14X73 (0.03) W14X22 (0.12) W16X26 (0.08)
HP16X88 (0.02) W16X89 (0.02) HP16X101 (0.02) W16X100 (0.02)

BRACE FORCE: Strut, Tieback, Plate Anchor, Deadman, Sheet Pile as Anchor

No. & Type	Depth	Angle	Space	Total F.	Horiz. F.	Vert. F.	L_free	Fixed Length
1. Tieback	6.0	15.0	12.0	104.8*	101.2	27.1	11.7	66.7
2. Tieback	14.0	15.0	12.0	109.8	106.1	28.4	7.6	69.9

* Top Brace increased by 15% (DM7.2-103)
UNITS: Width,Diameter,Spacing,Length,Depth,and Height - ft; Force - kip; Bond Strength and Pressure - ksf

DRIVING PRESSURES (ACTIVE, WATER, & SURCHARGE): Pressures below will be multiplied by a Factor =1.6

Z1	P1	Z2	P2	Slope
0	0	20	0.800	.04
0	.1875	20	0.188	0

PASSIVE PRESSURES:

Z1	P1	Z2	P2	Slope
20	0	36.66	5.000	0.3

ACTIVE SPACING:

No.	Z depth	Spacing
1	0.00	6.00
2	20.00	1.50

PASSIVE SPACING:

No.	Z depth	Spacing
1	20.00	3.00

UNITS: Width,Spacing,Diameter,Length,and Depth - ft; Force - kip; Moment - kip-ft
Friction,Bearing,and Pressure - ksf; Pres. Slope - kip/ft3; Deflection - in

2703.001 - 190 Ocean Parkway
20-ft Retained Seismic

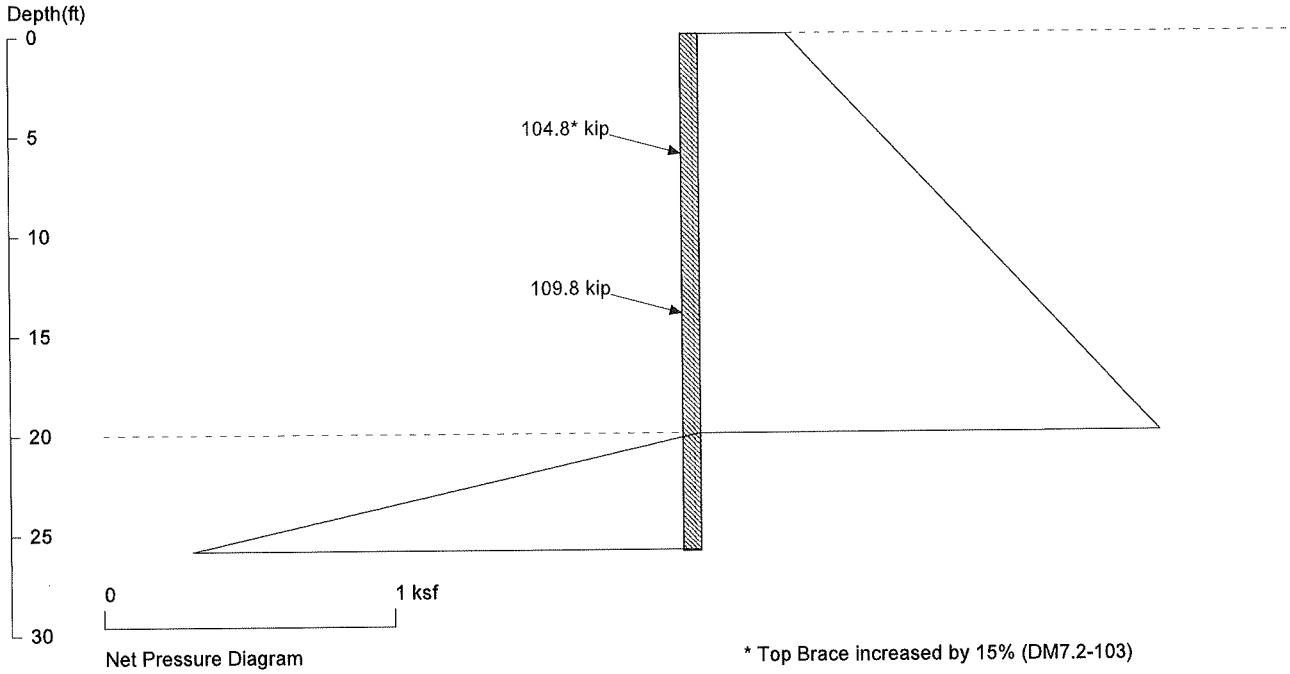

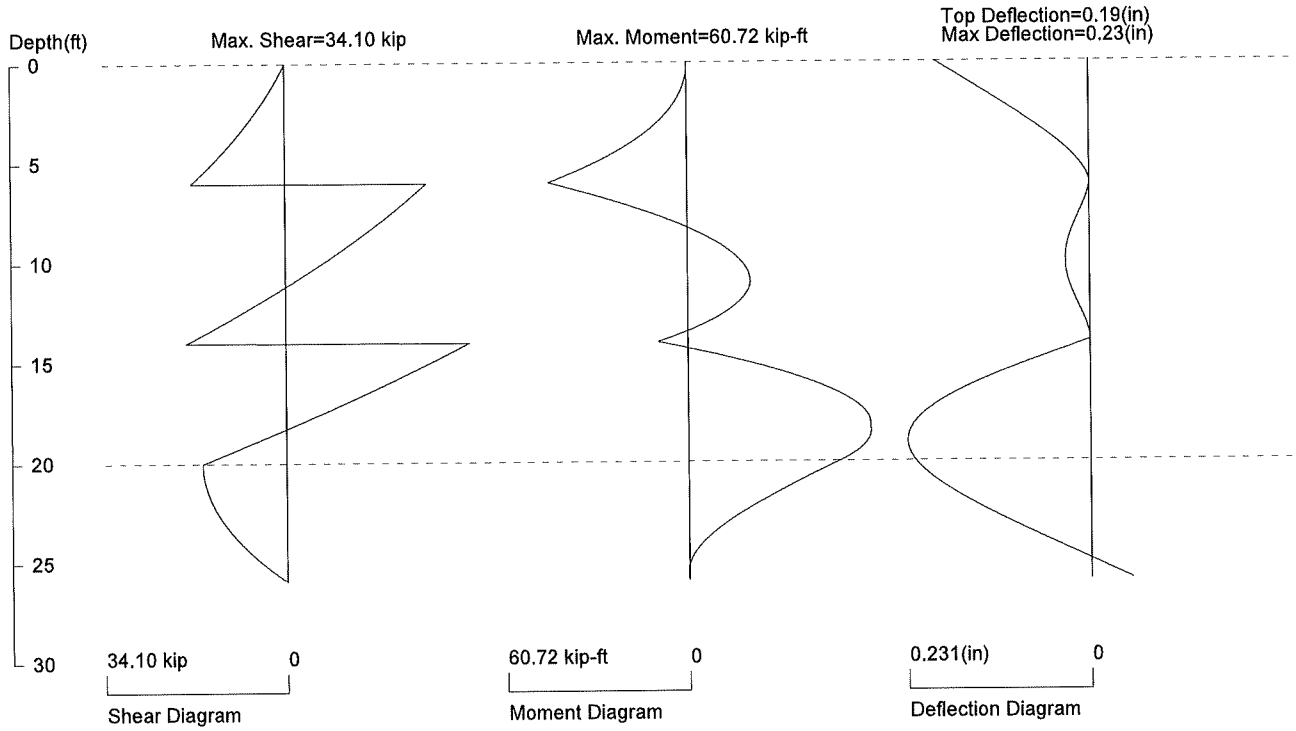

PRESSURE, SHEAR, MOMENT, AND DEFLECTION DIAGRAMS

Based on pile spacing: 6.0 foot or meter

First Suitable Pile: HP8X36: E (ksi)=29000.0, I (in4)/pile=119.0

File: H:\Jobs\2700-2799\2703.001 190 Ocean Parkway\Analyses\20-ft seismic.sh8

<ShoringSuite> CIVILTECH SOFTWARE USA www.civiltech.com

Licensed to 4324324234 3424343

Drilled Pier Design

GIVEN

General:

Seismic Design Category **D**

$f_y := 60\ ksi$ — Yeild stress of steel

$f'_c := 3000\ psi$ — Compressive strength of concrete

$\phi := 0.9$ — Reduction factor for steel & bending

$\phi_t := 0.64$ — Reduction factor for concrete shear & torsion

Pier Design

$L := 30\ ft$ — Pier Length

$s_p := 6\ ft$ — Pier spacing

$d_p := 18\ in$ — Nominal diameter of driller pier

$c := 3\ in$ — Min. concrete cover on reinforcement

Design Loads

$P_u := 18.7\ kip$ — Max Axial Load (compressive)

$V_u := 33\ kip$ — Max Shear Demand

$M_u := 85\ kip \cdot ft$ — Max Moment Demand

REINFORCEMENT

Minimum Longitudinal Reinforcement

Seismic Design Categories D-F (CBC 1810.3.9.4.2)

$A_g := \frac{\pi \cdot d_p^{\ 2}}{4} = 254.47\ in^2$ — Area of concrete

$\rho_{min} := 0.005$ — min longitudinal reinforcement ratio

$A_{s_min} := A_g \cdot \rho_{min} = 1.27\ in^2$ — min area of longitudinal reinforcement

$n_{b_min} := 4$ — min # of longitudinal bars

$d_{b_min} := \sqrt{\frac{4 \cdot A_{s_min}}{\pi \cdot n_{b_min}}} = 0.636\ in$ — min bar diameter for 4 bars

Created with PTC Mathcad Express. See www.mathcad.com for more information.

Chosen Longitudinal Reinforcement

$d_b := 0.75\ in$ — Chosen longitudinal bar diameter

$A_b := \frac{\pi \cdot d_b^{\ 2}}{4} = 0.44\ in^2$ — Area of bar

$n_b := 8$ — number of bars

$A_s := n_b \cdot A_b = 3.53\ in^2$ — Area of steel

$A_s \geq A_{s_min} = 1$ if=1, O.K. — Area of steel > minimum check

Minimum Reinforced Length (CBC 1810.3.9.4.2)

$L_1 := \frac{L}{2} = 15\ ft$ — 1) 1/2 the element length

$L_2 := 10\ ft$ — 2) A distance of 10-ft

$L_3 := 3\ d_p = 4.5\ ft$ — 3) 3 x least element dimension

$S_m := \frac{\pi \cdot d_p^{\ 3}}{32} = 572.56\ in^3$ — Elastic section modulus of concrete pier (ignoring steel)

$M_{cr} := 3 \cdot \sqrt{f'_c \cdot psi} \cdot S_m = 7.84\ kip \cdot ft$ — Cracking moment of concrete

$L_4 := 24\ ft$ — 4) Depth from top of pier to section below Mcr (from Shoring suite)

$L_{r_min} := \max(L_1, L_2, L_3, L_4) = 24\ ft$ — Minimum reinforcement length

$L_r := 30\ ft$ — Chosen reinforced length

$L_r \geq L_{r_min} = 1$ if=1, O.K. — Length of reinforcement> minimum check

Created with PTC Mathcad Express. See www.mathcad.com for more information.

Minimum Transverse Reinforcement Spacing

No.3 bar for piers up to 20-in, No.4 bar for larger elements

$d_w := \text{if}\left(d_p \le 20\ in, 0.375\ in, 0.5\ in\right) = 0.375\ in$ transverse reinf. diameter

Within 3-times least direction spiral spacing must not exceed the smallest of:

$s_1 := \frac{d_p}{4} = 4.5\ in$ 1) 1/4 the least dimension

$s_2 := 6 \cdot d_b = 4.5\ in$ 2) 6 times the diameter of smallest longitudinal bar

3) eq 18.7.5.3 but not greater than 6-in and need not be less than 4-in

$h_x := d_p - 2 \cdot c = 12\ in$ spiral or tie diameter

$s_0 := 4\ in + \frac{\left(14\ in - h_x\right)}{3} = 4.67\ in$ eq 18.7.5.3 (ACI 318-14)

$s_3 := \text{if}\left(s_0 < 6\ in, \text{if}\left(s_0 > 4\ in, s_0, 4\ in\right), 6\ in\right) = 4.67\ in$

$s_{p_min} := min\left(s_1, s_2, s_3\right) = 4.5\ in$ minimum transverse spacing

Outside 3-times least direction spiral spacing must not exceed the smallest of:

$s_1 := 12\ d_b = 9\ in$ 1) 12 x longitudinal bar diameters

$s_2 := \frac{d_p}{2} = 9\ in$ 2) 1/2 least element dimension

$s_3 := 12\ in$ 3) 12 inches

$s_{s_min} := min\left(s_1, s_2, s_3\right) = 9\ in$ Secondary minimum spiral spacing

Minimum Transverse Reinforcement Ratio (within 3-times least direction)

$A_{ch} := \frac{\pi \cdot \left(d_p - c\right)^2}{4} = 176.71\ in^2$ Area of concrete within stirrups

$A_g = 254.47\ in^2$ Gross area of concrete

Per Table 18.7.5.4 spiral reinforcement ratio is greater of conditions (d), (e), & (f):

$P_u \le 0.3\ A_g \cdot f'_c = 1$ if either = 0 than (f) condition applies

$f'_c \le 10000\ psi = 1$

Created with PTC Mathcad Express. See www.mathcad.com for more information.

d) $\rho_{sa} := 0.45 \left(\frac{A_g}{A_{ch}} - 1\right) \frac{f'_c}{f_y} = 0.01$

e) $\rho_{sb} := 0.12 \cdot \frac{f'_c}{f_y} = 0.006$

$\rho_{s_min} := \max(\rho_{sa}, \rho_{sb}) = 0.01$ minimum transverse reinforcement ratio

$s_p := \frac{2 \cdot 0.25 \cdot \pi \cdot d_w^2}{\rho_{s_min} \cdot h_x} = 1.86\ in$ Spacing with miniumum transverse bar size

Chosen Transverse Reinforcement in primary zone

$d_w := 0.5\ in$ Chosen longitudinal bar diameter

$A_{sh} := 2 \cdot \frac{\pi \cdot d_w^2}{4} = 0.39\ in^2$ Area of transverse steel

$s_p := 3\ in$ Chosen spiral pitch in primary zone

$\rho_s := \frac{A_{sh}}{s_p \cdot h_x} = 0.011$ transverse reinforcement ratio

$\rho_s \geq \rho_{s_min} = 1$ if=1, O.K. Area of steel > minimum check

$s_p \leq s_{p_min} = 1$ if=1, O.K. spacing < minimum check

Chosen Transverse Reinforcement in Secondary zone

$d_w = 0.5\ in$ Chosen longitudinal bar diameter

$s_s := s_{s_min} = 9\ in$ Chosen spiral pitch in secondary zone

$s_s \leq s_{s_min} = 1$ if=1, O.K. spacing < minimum check

Created with PTC Mathcad Express. See www.mathcad.com for more information.

PIER CAPACITY

Shear Capacity

$\lambda := 1.0$ lightweight concrete factor

$b_w := d_p = 18\ in$ width of element = diameter

$d := 0.8 \cdot d_p = 14.4\ in$ effective depth (ACI 318-14 22.5.2.2)

Shear resistance from concrete

$$V_c := 2 \cdot \left(1\ psi + \frac{P_u}{2000\ A_g}\right) \cdot \lambda \cdot \sqrt{f'_c \div psi} \cdot b_w \cdot d = 29.44\ kip$$ eq. 22.5.6.1

$$V_{sp} := \frac{A_{sh} \cdot f_y \cdot d}{s_p} = 113.1\ kip$$ Shear resistance from primary stirrups

$$V_{ss} := \frac{A_{sh} \cdot f_y \cdot d}{s_s} = 37.7\ kip$$ Shear resistance from secondary stirrups

$V_{np} := V_c + V_{sp} = 142.53\ kip$ Nominal shear capacity in primary zone

$V_{ns} := V_c + V_{ss} = 67.14\ kip$ Nominal shear capacity in secondary zone

$\frac{\phi \cdot V_{np}}{V_u} = 3.89$ > 1 ∴ O.K. Nominal shear check in primary zone

$\frac{\phi \cdot V_{ns}}{V_u} = 1.83$ > 1 ∴ O.K. Nominal shear check in secondary zone

Created with PTC Mathcad Express. See www.mathcad.com for more information.

Axial and Moment Capacity (CSI Column)

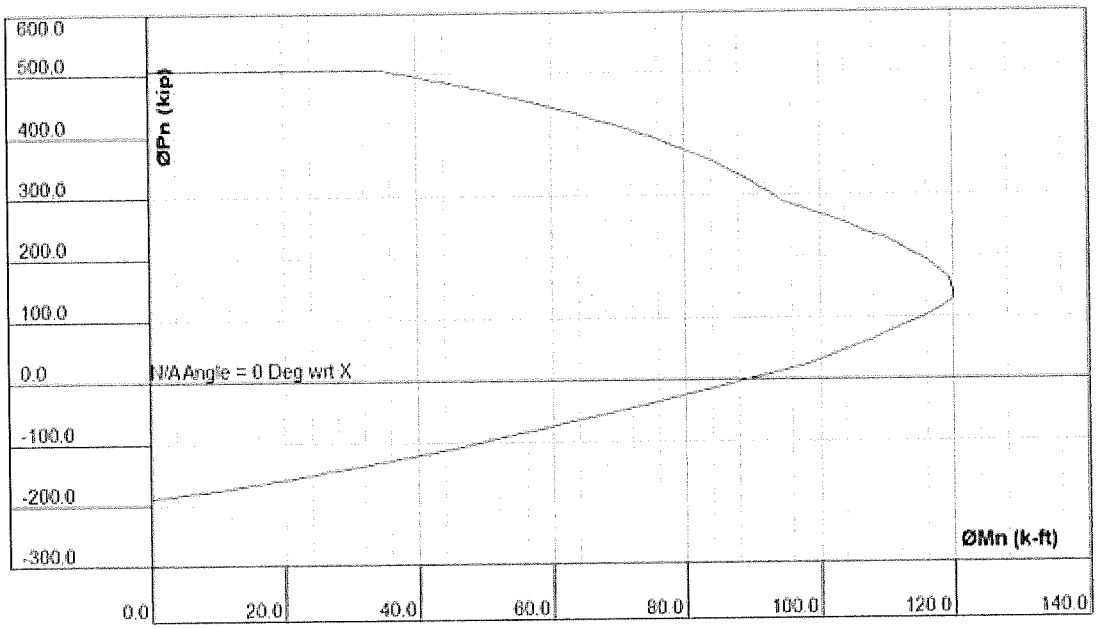

$\phi M_n := 89.3\ kip \cdot ft$ — Moment capacity at no axial load

$\phi P_n := 400\ kip$ — Axial capacity at maximum applied moment

$\frac{\phi M_n}{M_u} = 1.05$ > 1 ∴ O.K. — Moment capacity check

$\frac{\phi P_n}{P_u} = 21.39$ > 1 ∴ O.K. — Axial capacity check

Created with PTC Mathcad Express. See www.mathcad.com for more information.

Tieback Design

CLIENT: Mr. Tom Bassett
PROJECT: Ocean Parkway, Bolinas, CA
DESCRIPTION: Tieback Design

JOB#: 2703.001 DATE: 10/11/18
CREATED BY: SLM
CHECKED BY: SAS

MILLER PACIFIC ENGINEERING GROUP

GIVEN:

Tieback loads determined using Shoring Suite with 1.6 H (earth) & 1.0 E (seismic)

$P_u := 86.7\ kip$ — ultimate static tieback load

$P_{u_seis} := 109.8\ kip$ — ultimate seismic tieback load

$TL := 1.33$ — tieback test load factor per FHWA

$Q_{ult} := TL \cdot P_u = 115\ kip$ — test load for tieback

$Q_{ult} \geq P_{u_seis} = 1$ — if = 1, test load > seismic load
if = 0, increase test load factor to 1.5 or set test load = seismic load, whichever is greater.

Tieback Design

$d_{ra} := 6\ in$ — diameter of tieback

$q_{sL} := 1250\ psf$ — side resistance of soil/rock

$f_s := \pi \cdot d_{ra} \cdot q_{sL} = 1.96\ \frac{kip}{ft}$ — sleeve friction/Lf of tieback

$L_b := \text{ceil}\left(\frac{Q_{ult}}{f_s \cdot ft}\right) \cdot ft = 59\ ft$ — minimum embedment into competent soil/rock

Tendon Area

$f_y := 150\ ksi$ — yeild strength for tieback

$A_{T_min} := \frac{Q_{ult}}{f_y} = 0.77\ in^2$ — area of steel tendon required

use 1" diam. grade 100 ksi BAR

$d_t := 1.0\ in$ — diameter of chosen bar

$A_T := \frac{\pi \cdot d_t^2}{4} = 0.79\ in^2$ — area for chosen bar

$A_T \geq A_{T_min} = 1$ — if=1, O.K. & bar size is adequate

Created with PTC Mathcad Express. See www.mathcad.com for more information.

Tendon Pullout

$$\frac{1.25 \cdot P}{\pi \cdot d_{ra} \cdot L_T} \leq \frac{200\ psi}{F.S.}$$ tendon to grout bond strength

$$L_T := \frac{1.25 \cdot Q_{ult}}{200\ psi \cdot \pi \cdot d_t} = 19\ ft$$ minimum length of tendon

$L_T \leq L_b = 1$ if = 1, O.K. check if min tendon length is less than designed rock anchor length

$L_f := 11\ ft$ Chosen free (unbonded) length

$L_T := L_f + L_b = 70\ ft$ total tieback length

Created with PTC Mathcad Express. See www.mathcad.com for more information.

Whaler Design

WALER DESIGN

Given:

$P := 109.8\ kip$ — Tieback Load with 1.6 Earth Loading Factor (from shoring suite)

$S_p := 6\ ft$ — Pier Spacing

$f_y := 50\ ksi$ — Yeild Strength of Steel

$E := 29000\ ksi$ — Young's Modulus of Steel

$\phi_b := 0.9$ — Strength Reduction Factor for bending

$\phi_v := 0.75$ — Strength Reduction Factor for shear

LOADING: Assume simply supported beam with point load at midspan

$V_{max} := \frac{P}{2} = 54.9\ kip$ — Max shear force

$M_{max} := \frac{P \cdot S_p}{4} = 164.7\ kip \cdot ft$ — Max Moment for simple supported beam with point load and span S

$Z_{min} := \frac{M_{max}}{\phi_b \cdot f_y} = 43.92\ in^3$ — Minimum Plastic Section Modulus of Waler

Choose (2) C10x25

Section Properties of chosen channel

$A_s := 7.34\ in^2$	Cross sectional area	$S_x := 18.2\ in^3$	Elastic section modulus
$d := 10\ in$	Section depth	$Z_x := 23.1\ in^3$	Plastic section modulus
$t_w := 0.526\ in$	Web thickness	$I_y := 3.34\ in^4$	Moment of Inertia about the y-axis
$b_f := 2.89\ in$	Flange height	$r_y := 0.675 \cdot in$	Radius of gyration about y-axis
$t_f := 0.436\ in$	Flange thickness	$J := 0.687\ in^4$	Polar moment of intertia
$T := 8\ in$	Web clear height	$C_w := 68.3\ in^6$	Torsional warping constant
$I_x := 91.1\ in^4$	Moment of Inertia about the x-axis		

Created with PTC Mathcad Express. See www.mathcad.com for more information.

SECTION CLASSIFICATION: Flexure in flanges of rolled I-shaped section and channels

$b := \frac{b_f}{2}$ effective flange width for unstiffened elements

If $\frac{b}{t_f} = 3.31 < \lambda_p := 0.38 \cdot \sqrt{\frac{E}{f_y}} = 9.15$ Then section is considered compact

If $\lambda_p < \frac{b}{t_f} = 3.31 < \lambda_r := 1.0 \cdot \sqrt{\frac{E}{f_y}} = 24.08$ Then section is considered non-compact

$\frac{b}{t_f} \le \lambda_p = 1$ If =1 Compact, if =0 check for non-compact or slender member

$\lambda_p < \frac{b}{t_f} \le \lambda_r = 0$ If =1 non-compact, if both = 0 member is slender

FLEXURE AND LATERAL TORISONAL BUCKLING: F2 - Doubly Symmetric Compact I-shaped Members and Channels Bent About Their Major Axis

$M_p := f_y \cdot Z_x = 96.25\ kip \cdot ft$ (F2-1)

$L_b := S_p = 72\ in$ Unbraced length

$L_p := 1.76 \cdot r_y \cdot \sqrt{\frac{E}{f_y}} = 28.61\ in$ (F2-5)limiting length for full plastic behavior

$h_0 := d - t_f = 9.56\ in$ distance between flange centriods

$r_{ts} := \sqrt{\frac{\sqrt{I_y \cdot C_w}}{S_x}} = 0.91\ in$ (F2-7)

$c := \frac{h_0}{2} \cdot \sqrt{\frac{I_y}{C_w}} = 1.06$ (F2-8b)

$C_b := 1.32$ Assuming simply supported

Limiting length for inelastic buckling (F2-6)

$$L_r := 1.95 \cdot r_{ts} \cdot \frac{E}{0.7 \cdot f_y} \cdot \sqrt{\frac{J \cdot c}{S_x \cdot h_0}} \cdot \sqrt{1 + \sqrt{1 + 6.76 \cdot \left(\frac{0.7 \cdot f_y}{E} \cdot \frac{S_x \cdot h_0}{J \cdot c}\right)^2}} = 142.67\ in$$

Created with PTC Mathcad Express. See www.mathcad.com for more information.

If:

$L_p > L_b$ ∴ Full Plastic Behavior and:
Limit state of lateral-torsional buckling does not apply

$$M_n = f_y \cdot Z_x \qquad \text{(F2-1)}$$

If:

$L_p < L_b < L_r$ ∴ Inelastic Buckling Condition and:

$$M_n = C_b \cdot \left[M_p - \left(M_p - 0.7 \cdot f_y \cdot S_x\right) \cdot \left(\frac{L_b - L_p}{L_r - L_p}\right) \right] \le M_p \qquad \text{(F4-2)}$$

If:

$L_b > L_r$ ∴ Elastic Buckling Condition and:

$$M_n = \left(F_{cr} \cdot S_x \le M_p\right) \quad \text{where} \quad F_{cr} := \frac{C_b \cdot \pi^2 \ E}{\left(\frac{L_b}{r_{ts}}\right)^2} \cdot \sqrt{1 + 0.078 \ \frac{J \cdot c}{S_x \cdot h_0} \cdot \left(\frac{L_b}{r_{ts}}\right)^2} \qquad \text{(F4-3)}$$

Therefore:

$M_n = 96.25 \ kip \cdot ft$ — Nominal Moment Capacity of one channel

Strength Checks:

$\frac{\phi_b \cdot 2 \cdot M_n}{M_{max}} = 1.05 > 1$ O.K. — Moment check for both walers

$\frac{P \cdot S_p^{\ 3}}{48 \cdot E \cdot 2 \cdot I_x} = 0.1616 \ in$ — Deflection of combined c-channel Waler

Created with PTC Mathcad Express. See www.mathcad.com for more information.

SHEAR

$V_n = 0.6 \cdot f_y \cdot A_w \cdot C_v$ (G2-1) Nominal shear capacity

$A_w := d \cdot t_w = 5.26\ in^2$ Area of web

$\frac{T}{t_w} = 15.21$ Ratio of web hight to thickness

$k_v := 5$ when T/tw<260 for unstiffened webs

For:

$\frac{T}{t_w} \le 1.10 \cdot \sqrt{k_v \cdot \frac{E}{f_y}} = 1$ Then $C_v = 1$ (G2-3)

For:

$1.10 \cdot \sqrt{k_v \cdot \frac{E}{f_y}} < \frac{T}{t_w} \le 1.37 \cdot \sqrt{k_v \cdot \frac{E}{f_y}} = 0$ Then $C_v = \frac{1.10 \cdot \sqrt{k_v \cdot E \div f_y}}{T \div t_w}$ (G2-4)

For:

$\frac{T}{t_w} > 1.37 \cdot \sqrt{k_v \cdot \frac{E}{f_y}} = 0$ Then $C_v = \frac{1.51 \cdot E \cdot k_v}{(T \div t_w)^2 \cdot f_y}$ (G2-5)

Therefore:

$C_v = 1$

$V_n := 0.6 \cdot f_y \cdot A_w \cdot C_v = 157.8\ kip$ (G2-1) Nominal shear capacity

$\frac{\phi_v \cdot V_n}{V_{max}} = 2.16$ >1 O.K. Shear check for both walers

Created with PTC Mathcad Express. See www.mathcad.com for more information.

Shotcrete Facing Design
0- To 7-ft

CLIENT: Mr. Tom Bassett
PROJECT: Ocean Parkway, Bolinas, CA
DESCRIPTION: 0- to 7-ft Facing Calculatons

JOB#: 2703.001 DATE: 9/11/18
CREATED BY: SLM
CHECKED BY: SAS

MILLER PACIFIC ENGINEERING GROUP

GIVEN:

$f_y := 60\ ksi$ — Yeild stress of steel

$f'_c := 3000\ psi$ — Compressive strength of concrete

$\phi := 0.9$ — Reduction factor for steel & bending

$\phi_v := 0.64$ — Reduction factor for concrete shear

$\phi_{sat_pi} := 0.45$ — Reduction factor for epoxy bond strength

$E := 1.6$ — Load factor for soil pressure

$L := 6\ ft$ — Span length for facing (pier spacing)

$p_a := 40\ pcf$ — soil active pressure

DESIGN:

$Z_{lag} := 6.5\ ft$ — depth of lagging

$p_{lag} := E \cdot p_a \cdot Z_{lag} = 416\ psf$ — Factored pressure behind lagging at depth Z

$F_a := 0.6$ — Soil arching factor (Caltrans recommends 0.6 & AASHTO 0.8)

$s := 12\ in$ — Chosen reinforcement spacing and "tributary" width

Loading

$M_u := s \cdot F_a \cdot \frac{p_{lag} \cdot L^2}{8} = 1123.2\ lbf \cdot ft$ — ultimate moment on facing at depth Z

$V_u := s \cdot p_{lag} \cdot \frac{L}{2} = 1248\ lbf$ — ultimate shear on facing at depth Z

Slab/Facing Dimensions

$t := 6\ in$

$d := \frac{t}{2} = 3\ in$

Created with PTC Mathcad Express. See www.mathcad.com for more information.

Slab/Facing Reinforcement

$\# := 5$ bars @ $s = 12\ in$ O.C.: chosen reinforcement

$d_b := \frac{\#}{8}\ in = 0.63\ in$ Diameter of longitudinal bar

$b := s = 12\ in$ analysis width = bar spacing

$A_s := \pi \cdot \frac{d_b^{\ 2}}{4} = 0.31\ in^2$ Area of steel: since b=s As = 1 bar area

$\rho := \frac{A_s}{b \cdot d} = 0.852\%$ Longintudinal reinforcement ratio

$\rho_{min} := 3 \cdot \frac{\sqrt{f'_c \cdot psi}}{f_y} = 0.274\%$ $\rho > \rho_{min} = 1$ if = 1, O.K.
minimum reinforcement check

Moment Capacity

$a := \frac{A_s \cdot f_y}{0.85 \cdot f'_c \cdot (d)} = 2.41\ in$ N.A. factor

$M_n := A_s \cdot f_y \cdot \left(d - \frac{a}{2}\right) = 2.76\ kip \cdot ft$ Nominal moment capacity

$\frac{\phi \cdot M_n}{M_u} = 2.21$ >1 ∴ O.K. Moment capacity check

Shear Capacity

$V_n := b \cdot d \cdot 2 \cdot \sqrt{f'_c \cdot psi} = 3.94\ kip$ Shear resistance from concrete

$\frac{\phi_v \cdot V_n}{V_u} = 2.02$ >1 ∴ O.K. Shear capacity check

Created with PTC Mathcad Express. See www.mathcad.com for more information.

Anchor Capacity

$s_a := 12\ in$

$\tau_{cr} := 698\ psi$ — Cretical bond stress for saturated concrete with <12 bar diameter embedment

$P_u := 2 \cdot V_u = 2496\ lbf$ — Ultimate pullout load

$d_{emb_min} := \dfrac{P_u \cdot s_a}{s \cdot \phi_{sat_pi} \cdot \pi \cdot d_b \cdot \tau_{cr}} = 4.05\ in$ — Minimum anchor embedment

$d_{emb_max} := 12\ d_b = 7.5\ in$ — maximum anchor embedment

$d_{emb} := 7\ in$ — chosen embedment

$d_{emb_min} \le d_{emb} \le d_{emb_max} = 1$ — check chosen embedment

$P_{ns} := A_s \cdot f_y = 18.41\ kip$ — nominal yeild strength of chosen bar

$\dfrac{\phi \cdot P_{ns}}{P_u} = 6.64$ >1 ∴ O.K. — check that bar can handle load

Created with PTC Mathcad Express. See www.mathcad.com for more information.

Shotcrete Facing Design
7- To 15-ft

CLIENT: Mr. Tom Bassett
PROJECT: Ocean Parkway, Bolinas, CA
DESCRIPTION: 7- to 15-ft Facing Calculatons

JOB#: 2703.001 DATE: 9/11/18
CREATED BY: SLM
CHECKED BY: SAS

MILLER PACIFIC ENGINEERING GROUP

GIVEN:

$f_y := 60\ ksi$ — Yeild stress of steel

$f'_c := 3000\ psi$ — Compressive strength of concrete

$\phi := 0.9$ — Reduction factor for steel & bending

$\phi_v := 0.64$ — Reduction factor for concrete shear

$\phi_{sat_pi} := 0.45$ — Reduction factor for epoxy bond strength

$E := 1.6$ — Load factor for soil pressure

$L := 6\ ft$ — Span length for facing (pier spacing)

$p_a := 40\ pcf$ — soil active pressure

DESIGN:

$Z_{lag} := 14.5\ ft$ — depth of lagging

$p_{lag} := E \cdot p_a \cdot Z_{lag} = 928\ psf$ — Factored pressure behind lagging at depth Z

$F_a := 0.6$ — Soil arching factor (Caltrans recommends 0.6 & AASHTO 0.8)

$s := 12\ in$ — Chosen reinforcement spacing and "tributary" width

Loading

$M_u := s \cdot F_a \cdot \frac{p_{lag} \cdot L^2}{8} = 2505.6\ lbf \cdot ft$ — ultimate moment on facing at depth Z

$V_u := s \cdot p_{lag} \cdot \frac{L}{2} = 2784\ lbf$ — ultimate shear on facing at depth Z

Slab/Facing Dimensions

$t := 8\ in$

$d := \frac{t}{2} = 4\ in$

Created with PTC Mathcad Express. See www.mathcad.com for more information.

Slab/Facing Reinforcement

$\# := 5$ bars @ $s = 12\ in$ O.C.: chosen reinforcement

$d_b := \frac{\#}{8}\ in = 0.63\ in$ Diameter of longitudinal bar

$b := s = 12\ in$ analysis width = bar spacing

$A_s := \pi \cdot \frac{d_b^{\ 2}}{4} = 0.31\ in^2$ Area of steel: since b=s As = 1 bar area

$\rho := \frac{A_s}{b \cdot d} = 0.639\%$ Longintudinal reinforcement ratio

$\rho_{min} := 3 \cdot \frac{\sqrt{f'_c \cdot psi}}{f_y} = 0.274\%$ $\rho > \rho_{min} = 1$ if = 1, O.K.
minimum reinforcement check

Moment Capacity

$a := \frac{A_s \cdot f_y}{0.85 \cdot f'_c \cdot (d)} = 1.8\ in$ N.A. factor

$M_n := A_s \cdot f_y \cdot \left(d - \frac{a}{2}\right) = 4.75\ kip \cdot ft$ Nominal moment capacity

$\frac{\phi \cdot M_n}{M_u} = 1.71$ >1 ∴ O.K. Moment capacity check

Shear Capacity

$V_n := b \cdot d \cdot 2 \cdot \sqrt{f'_c \cdot psi} = 5.26\ kip$ Shear resistance from concrete

$\frac{\phi_v \cdot V_n}{V_u} = 1.21$ >1 ∴ O.K. Shear capacity check

Created with PTC Mathcad Express. See www.mathcad.com for more information.

Anchor Capacity

$s_a := 9\ in$

$\tau_{cr} := 698\ psi$ — Cretical bond stress for saturated concrete with <12 bar diameter embedment

$P_u := 2 \cdot V_u = 5568\ lbf$ — Ultimate pullout load

$d_{emb_min} := \dfrac{P_u \cdot s_a}{s \cdot \phi_{sat_pi} \cdot \pi \cdot d_b \cdot \tau_{cr}} = 6.77\ in$ — Minimum anchor embedment

$d_{emb_max} := 12\ d_b = 7.5\ in$ — maximum anchor embedment

$d_{emb} := 7\ in$ — chosen embedment

$d_{emb_min} \le d_{emb} \le d_{emb_max} = 1$ — check chosen embedment

$P_{ns} := A_s \cdot f_y = 18.41\ kip$ — nominal yeild strength of chosen bar

$\dfrac{\phi \cdot P_{ns}}{P_u} = 2.98$ >1 ∴ O.K. — check that bar can handle load

Created with PTC Mathcad Express. See www.mathcad.com for more information.

Shotcrete Facing Design
15- To 20-ft

CLIENT: Mr. Tom Bassett
PROJECT: Ocean Parkway, Bolinas, CA
DESCRIPTION: 15- to 20-ft Facing Calculatons

JOB#: 2703.001 DATE: 9/11/18
CREATED BY: SLM
CHECKED BY: SAS

MILLER PACIFIC ENGINEERING GROUP

GIVEN:

$f_y := 60\ ksi$ — Yeild stress of steel

$f'_c := 3000\ psi$ — Compressive strength of concrete

$\phi := 0.9$ — Reduction factor for steel & bending

$\phi_v := 0.64$ — Reduction factor for concrete shear

$\phi_{sat_pi} := 0.45$ — Reduction factor for epoxy bond strength

$E := 1.6$ — Load factor for soil pressure

$L := 6\ ft$ — Span length for facing (pier spacing)

$p_a := 40\ pcf$ — soil active pressure

DESIGN:

$Z_{lag} := 19.5\ ft$ — depth of lagging

$p_{lag} := E \cdot p_a \cdot Z_{lag} = 1248\ psf$ — Factored pressure behind lagging at depth Z

$F_a := 0.6$ — Soil arching factor (Caltrans recommends 0.6 & AASHTO 0.8)

$s := 12\ in$ — Chosen reinforcement spacing and "tributary" width

Loading

$M_u := s \cdot F_a \cdot \frac{p_{lag} \cdot L^2}{8} = 3369.6\ lbf \cdot ft$ — ultimate moment on facing at depth Z

$V_u := s \cdot p_{lag} \cdot \frac{L}{2} = 3744\ lbf$ — ultimate shear on facing at depth Z

Slab/Facing Dimensions

$t := 10\ in$

$d := \frac{t}{2} = 5\ in$

Created with PTC Mathcad Express. See www.mathcad.com for more information.

Slab/Facing Reinforcement

$\# := 5$ bars @ $s = 12\ in$ O.C.: chosen reinforcement

$d_b := \frac{\#}{8}\ in = 0.63\ in$ Diameter of longitudinal bar

$b := s = 12\ in$ analysis width = bar spacing

$A_s := \pi \cdot \frac{d_b^{\ 2}}{4} = 0.31\ in^2$ Area of steel: since b=s As = 1 bar area

$\rho := \frac{A_s}{b \cdot d} = 0.511\%$ Longintudinal reinforcement ratio

$\rho_{min} := 3 \cdot \frac{\sqrt{f'_c \cdot psi}}{f_y} = 0.274\%$ $\rho > \rho_{min} = 1$ if = 1, O.K.
minimum reinforcement check

Moment Capacity

$a := \frac{A_s \cdot f_y}{0.85 \cdot f'_c \cdot (d)} = 1.44\ in$ N.A. factor

$M_n := A_s \cdot f_y \cdot \left(d - \frac{a}{2}\right) = 6.56\ kip \cdot ft$ Nominal moment capacity

$\frac{\phi \cdot M_n}{M_u} = 1.75$ >1 ∴ O.K. Moment capacity check

Shear Capacity

$V_n := b \cdot d \cdot 2 \cdot \sqrt{f'_c \cdot psi} = 6.57\ kip$ Shear resistance from concrete

$\frac{\phi_v \cdot V_n}{V_u} = 1.12$ >1 ∴ O.K. Shear capacity check

Created with PTC Mathcad Express. See www.mathcad.com for more information.

Anchor Capacity

$s_a := 6\ in$

$\tau_{cr} := 698\ psi$ — Cretical bond stress for saturated concrete with <12 bar diameter embedment

$P_u := 2 \cdot V_u = 7488\ lbf$ — Ultimate pullout load

$d_{emb_min} := \dfrac{P_u \cdot s_a}{s \cdot \phi_{sat_pi} \cdot \pi \cdot d_b \cdot \tau_{cr}} = 6.07\ in$ — Minimum anchor embedment

$d_{emb_max} := 12\ d_b = 7.5\ in$ — maximum anchor embedment

$d_{emb} := 7\ in$ — chosen embedment

$d_{emb_min} \le d_{emb} \le d_{emb_max} = 1$ — check chosen embedment

$P_{ns} := A_s \cdot f_y = 18.41\ kip$ — nominal yeild strength of chosen bar

$\dfrac{\phi \cdot P_{ns}}{P_u} = 2.21$ >1 ∴ O.K. — check that bar can handle load

Created with PTC Mathcad Express. See www.mathcad.com for more information.

Boring Logs

MAJOR DIVISIONS		SYMBOL	DESCRIPTION
COARSE GRAINED SOILS over 50% sand and gravel	CLEAN GRAVEL	GW	Well-graded gravels or gravel-sand mixtures, little or no fines
		GP	Poorly-graded gravels or gravel-sand mixtures, little or no fines
	GRAVEL with fines	GM	Silty gravels, gravel-sand-silt mixtures
		GC	Clayey gravels, gravel-sand-clay mixtures
	CLEAN SAND	SW	Well-graded sands or gravelly sands, little or no fines
		SP	Poorly-graded sands or gravelly sands, little or no fines
	SAND with fines	SM	Silty sands, sand-silt mixtures
		SC	Clayey sands, sand-clay mixtures
FINE GRAINED SOILS over 50% silt and clay	SILT AND CLAY liquid limit <50%	ML	Inorganic silts and very fine sands, rock flour, silty or clayey fine sands or clayey silts with slight plasticity
		CL	Inorganic clays of low to medium plasticity, gravely clays, sandy clays, silty clays, lean clays
		OL	Organic silts and organic silt-clays of low plasticity
	SILT AND CLAY liquid limit >50%	MH	Inorganic silts, micaceous or diatomaceous fine sands or silts, elastic silts
		CH	Inorganic clays of high plasticity, fat clays
		OH	Organic clays of medium to high plasticity
HIGHLY ORGANIC SOILS		PT	Peat, muck, and other highly organic soils
ROCK			Undifferentiated as to type or composition

KEY TO BORING AND TEST PIT SYMBOLS

CLASSIFICATION TESTS

PI	PLASTICITY INDEX
LL	LIQUID LIMIT
SA	SIEVE ANALYSIS
HYD	HYDROMETER ANALYSIS
P200	PERCENT PASSING NO. 200 SIEVE
P4	PERCENT PASSING NO. 4 SIEVE

SAMPLER TYPE

- MODIFIED CALIFORNIA
- STANDARD PENETRATION TEST
- THIN-WALLED / FIXED PISTON
- HAND SAMPLER
- ROCK CORE
- X DISTURBED OR BULK SAMPLE

NOTE: Test boring and test pit logs are an interpretation of conditions encountered at the excavation location during the time of exploration. Subsurface rock, soil or water conditions may vary in different locations within the project site and with the passage of time. Boundaries between differing soil or rock descriptions are approximate and may indicate a gradual transition.

STRENGTH TESTS

TV	FIELD TORVANE (UNDRAINED SHEAR)
UC	LABORATORY UNCONFINED COMPRESSION
TXCU	CONSOLIDATED UNDRAINED TRIAXIAL
TXUU	UNCONSOLIDATED UNDRAINED TRIAXIAL
	UC, CU, UU = 1/2 Deviator Stress

SAMPLER DRIVING RESISTANCE

Modified California and Standard Penetration Test samplers are driven 18 inches with a 140-pound hammer falling 30 inches per blow. Blows for the initial 6-inch drive seat the sampler. Blows for the final 12-inch drive are recorded onto the logs. Sampler refusal is defined as 50 blows during a 6-inch drive. Examples of blow records are as follows:

25	sampler driven 12 inches with 25 blows after initial 6-inch drive
85/7"	sampler driven 7 inches with 85 blows after initial 6-inch drive
50/3"	sampler driven 3 inches with 50 blows during initial 6-inch drive or beginning of final 12-inch drive

MPEG MILLER PACIFIC ENGINEERING GROUP
504 Redwood Blvd.
Suite 220
Novato, CA 94947
T 415 / 382-3444
F 415 / 382-3450
www.millerpac.com

A CALIFORNIA CORPORATION, © 2018, ALL RIGHTS RESERVED

FILENAME: 2703.001 BL.dwg

SOIL CLASSIFICATION CHART

190 Ocean Parkway
Bolinas, California

Project No. 2703.001 Date: 8/21/2018

Drawn SLM
Checked

A-1
FIGURE

FRACTURING AND BEDDING

Fracture Classification	Spacing	Bedding Classification
Crushed	less than 3/4 inch	Laminated
Intensely fractured	3/4 to 2-1/2 inches	Very thinly bedded
Closely fractured	2-1/2 to 8 inches	Thinly bedded
Moderately fractured	8 to 24 inches	Medium bedded
Widely fractured	2 to 6 feet	Thickly bedded
Very widely fractured	greater than 6 feet	Very thickly bedded

HARDNESS

Low	Carved or gouged with a knife
Moderate	Easily scratched with a knife, friable
Hard	Difficult to scratch, knife scratch leaves dust trace
Very hard	Rock scratches metal

STRENGTH

Friable	Crumbles by rubbing with fingers
Weak	Crumbles under light hammer blows
Moderate	Indentations <1/8 inch with moderate blow with pick end of rock hammer
Strong	Withstands few heavy hammer blows, yields large fragments
Very strong	Withstands many heavy hammer blows, yields dust, small fragments

WEATHERING

Complete	Minerals decomposed to soil, but fabric and structure preserved
High	Rock decomposition, thorough discoloration, all fractures are extensively coated with clay, oxides or carbonates
Moderate	Fracture surfaces coated with weathering minerals, moderate or localized discoloration
Slight	A few stained fractures, slight discoloration, no mineral decomposition, no affect on cementation
Fresh	Rock unaffected by weathering, no change with depth, rings under hammer impact

NOTE: Test boring and test pit logs are an interpretation of conditions encountered at the location and time of exploration. Subsurface rock, soil and water conditions may differ in other locations and with the passage of time.

MPEG MILLER PACIFIC ENGINEERING GROUP
504 Redwood Blvd.
Suite 220
Novato, CA 94947
T 415 / 382-3444
F 415 / 382-3450
www.millerpac.com

A CALIFORNIA CORPORATION, © 2018, ALL RIGHTS RESERVED

FILENAME: 2703.001 BL.dwg

ROCK CLASSIFICATION CHART

190 Ocean Parkway
Bolinas, California

Project No. 2703.001 Date: 8/21/2018

Drawn SLM
Checked

A-2
FIGURE

BORING 1

EQUIPMENT: Truck Mounted CME85 Drill Rig with 6.0-inch Hollow Flight Auger
DATE: 7/26/18
ELEVATION: 183 - feet*
*REFERENCE: Google Earth, 2018

DEPTH meters	DEPTH feet	SAMPLE	SYMBOL (4)	Description	BLOWS / FOOT (1)	DRY UNIT WEIGHT pcf (2)	MOISTURE CONTENT (%)	SHEAR STRENGTH psf (3)	OTHER TEST DATA	OTHER TEST DATA
0	0			Silty SAND (SM) Light brown, dry to moist, medium dense, fine-medium grained, ~15-20% medium plastic silt, trace clay, trace gravel in upper 1.0-ft.						
		■			27	87	4.7		36.6% P200	
1										
	5	■		Silty SAND (SM) Light tan, moist, medium dense, fine-medium grained, ~15% low-moderate plasticity clay.	23	112	18.2	1400 UC		
2										
3	10	■		SAND (SP) Light gray mottled with orange.	17	95	6.5		3.3% P200	
4										
	15									
5										
6	20			Hard drilling at 19-ft SHALE (see next page)						

▽ Water level encountered during drilling
▼ Water level measured after drilling

NOTES: (1) UNCORRECTED FIELD BLOW COUNTS
(2) METRIC EQUIVALENT DRY UNIT WEIGHT kN/m^3 = 0.1571 x DRY UNIT WEIGHT (pcf)
(3) METRIC EQUIVALENT STRENGTH (kPa) = 0.0479 x STRENGTH (psf)
(4) GRAPHIC SYMBOLS ARE ILLUSTRATIVE ONLY

MPEG MILLER PACIFIC ENGINEERING GROUP
504 Redwood Blvd.
Suite 220
Novato, CA 94947
T 415 / 382-3444
F 415 / 382-3450
www.millerpac.com

A CALIFORNIA CORPORATION, © 2018, ALL RIGHTS RESERVED
FILENAME: 2703.001 BL.dwg

BORING LOG

190 Ocean Parkway
Bolinas, California

Project No. 2703.001 Date: 8/21/2018

Drawn SLM
Checked

A-3
FIGURE

DEPTH meters / feet	SAMPLE	SYMBOL (4)	BORING 1 (CONTINUED)	BLOWS / FOOT (1)	DRY UNIT WEIGHT pcf (2)	MOISTURE CONTENT (%)	SHEAR STRENGTH psf (3)	OTHER TEST DATA	OTHER TEST DATA
20			SHALE Dark gray, moderately weathered, moderately hard, moderately strong, thinly bedded. [Bedrock]	50/4"	94	13.8			
7									
25									
8									
9 30			As above, grades to hard, medium bedding.	68		11.5			
10									
35									
11									
12 40									

▽ Water level encountered during drilling

▼ Water level measured after drilling

NOTES: (1) UNCORRECTED FIELD BLOW COUNTS
(2) METRIC EQUIVALENT DRY UNIT WEIGHT kN/m^3 = 0.1571 x DRY UNIT WEIGHT (pcf)
(3) METRIC EQUIVALENT STRENGTH (kPa) = 0.0479 x STRENGTH (psf)
(4) GRAPHIC SYMBOLS ARE ILLUSTRATIVE ONLY

MPEG MILLER PACIFIC ENGINEERING GROUP
504 Redwood Blvd.
Suite 220
Novato, CA 94947
T 415 / 382-3444
F 415 / 382-3450
www.millerpac.com

A CALIFORNIA CORPORATION, © 2018, ALL RIGHTS RESERVED

FILENAME: 2703.001 BL.dwg

BORING LOG

190 Ocean Parkway
Bolinas, California

Drawn SLM
Checked

Project No. 2703.001 Date: 8/21/2018

A-4
FIGURE

DEPTH meters / feet	SAMPLE	SYMBOL (4)	BORING 1 (CONTINUED)	BLOWS / FOOT (1)	DRY UNIT WEIGHT pcf (2)	MOISTURE CONTENT (%)	SHEAR STRENGTH psf (3)	OTHER TEST DATA	OTHER TEST DATA
40			SHALE Dark gray, slightly weathered, hard, strong, thinly bedded. [Bedrock]	50/4"		11.7			
13									
45									
14									
15									
50				72/11"		10.3			
16									
55									
17									
18									
60			End of boring at 61'-4" No groundwater encountered during exploration.	92/10"		10.3			

Water level encountered during drilling

Water level measured after drilling

NOTES: (1) UNCORRECTED FIELD BLOW COUNTS
(2) METRIC EQUIVALENT DRY UNIT WEIGHT kN/m^3 = 0.1571 x DRY UNIT WEIGHT (pcf)
(3) METRIC EQUIVALENT STRENGTH (kPa) = 0.0479 x STRENGTH (psf)
(4) GRAPHIC SYMBOLS ARE ILLUSTRATIVE ONLY

MPEG MILLER PACIFIC ENGINEERING GROUP
504 Redwood Blvd.
Suite 220
Novato, CA 94947
T 415 / 382-3444
F 415 / 382-3450
www.millerpac.com

A CALIFORNIA CORPORATION, © 2018, ALL RIGHTS RESERVED

FILENAME: 2703.001 BL.dwg

BORING LOG

190 Ocean Parkway
Bolinas, California

Project No. 2703.001 Date: 8/21/2018

Drawn SLM
Checked

A-5
FIGURE

BORING 2

EQUIPMENT: Truck Mounted CME85 Drill Rig with 6.0-inch Hollow Flight Auger
DATE: 7/26/18
ELEVATION: 183 - feet*
*REFERENCE: Google Earth, 2018

DEPTH meters / feet	SAMPLE	SYMBOL (4)		BLOWS / FOOT (1)	DRY UNIT WEIGHT pcf (2)	MOISTURE CONTENT (%)	SHEAR STRENGTH psf (3)	OTHER TEST DATA	OTHER TEST DATA
0 - 0			4.5" Asphalt Concrete over 6" Aggregate Base						
1			Sandy Gravel (GW) Medium yellow brown, dry to moist, medium dense.	20	121	5.9		11.3% P200	
5 / 2			Clayey SAND (SC) Light tan, moist, medium dense, fine-medium grained, ~15% low-moderate plasticity clay.	19	106	16.2	1700 UC		
3 / 10			SAND (SP) Light gray and mottled orange, moist, medium dense, fine-medium grained.	20	100	8.1		5.9% P200	
4 / 15 / 5			Grades to dark gray, wet, shale fragments present at bottom of sampler.	34	101	25.1	150 UC		
6 / 20			SHALE, (see next page)						

▽ Water level encountered during drilling
▼ Water level measured after drilling

NOTES: (1) UNCORRECTED FIELD BLOW COUNTS
(2) METRIC EQUIVALENT DRY UNIT WEIGHT kN/m^3 = 0.1571 x DRY UNIT WEIGHT (pcf)
(3) METRIC EQUIVALENT STRENGTH (kPa) = 0.0479 x STRENGTH (psf)
(4) GRAPHIC SYMBOLS ARE ILLUSTRATIVE ONLY

MPEG MILLER PACIFIC ENGINEERING GROUP
504 Redwood Blvd.
Suite 220
Novato, CA 94947
T 415 / 382-3444
F 415 / 382-3450
www.millerpac.com

A CALIFORNIA CORPORATION, © 2018, ALL RIGHTS RESERVED

FILENAME: 2703.001 BL.dwg

BORING LOG

190 Ocean Parkway
Bolinas, California

Drawn SLM
Checked

Project No. 2703.001 Date: 8/21/2018

A-6
FIGURE

DEPTH meters / feet	SAMPLE	SYMBOL (4)	BORING 2 (CONTINUED)	BLOWS / FOOT (1)	DRY UNIT WEIGHT pcf (2)	MOISTURE CONTENT (%)	SHEAR STRENGTH psf (3)	OTHER TEST DATA	OTHER TEST DATA
20			SHALE Dark gray, low hardness, moderately strong, thinly bedded, moderately to slightly weathered. [Bedrock]	62		12.3			
7									
25				50/5"		12.3			
8			End of boring at 25'-11" No groundwater encountered during exploration.						
9 30									
10									
35									
11									
12 40									

▽ Water level encountered during drilling

▼ Water level measured after drilling

NOTES: (1) UNCORRECTED FIELD BLOW COUNTS
(2) METRIC EQUIVALENT DRY UNIT WEIGHT kN/m^3 = 0.1571 x DRY UNIT WEIGHT (pcf)
(3) METRIC EQUIVALENT STRENGTH (kPa) = 0.0479 x STRENGTH (psf)
(4) GRAPHIC SYMBOLS ARE ILLUSTRATIVE ONLY

MPEG MILLER PACIFIC ENGINEERING GROUP
504 Redwood Blvd.
Suite 220
Novato, CA 94947
T 415 / 382-3444
F 415 / 382-3450
www.millerpac.com

A CALIFORNIA CORPORATION, © 2018, ALL RIGHTS RESERVED

FILENAME: 2703.001 BL.dwg

BORING LOG

190 Ocean Parkway
Bolinas, California

Project No. 2703.001 Date: 8/21/2018

Drawn SLM
Checked

A-7
FIGURE

BORING 3

EQUIPMENT: Truck Mounted CME85 Drill Rig with 6.0-inch Hollow Flight Auger
DATE: 7/26/18
ELEVATION: 183 - feet*
*REFERENCE: Google Earth, 2018

DEPTH meters	DEPTH feet	SAMPLE	SYMBOL (4)	Description	BLOWS / FOOT (1)	DRY UNIT WEIGHT pcf (2)	MOISTURE CONTENT (%)	SHEAR STRENGTH psf (3)	OTHER TEST DATA	OTHER TEST DATA
0	0			12" Aggregate Base						
		■		Clayey SAND (SC) Yellow brown, moist, medium dense, fine to medium grained, ~10-15% low to medium plasticity clay.	15	118	11.5	1600 UC		
1	5	■		Silty SAND (SM) Yellow brown, moist, medium dense, fine to medium grained, ~15-20% low plasticity silt.	21	100	11.7			
2										
3	10	■		SAND (SP) Gray brown, moist, medium dense, fine-medium grained.	26	95	6.5		3.7% P200	
4										
	15	■		Grades to wet, loose	53	104	19.5	1900 UC		
5				SHALE Dark gray, highly weathered, low hardness, low strength, thinly bedded. [Bedrock]						
6	20	■								

▽ Water level encountered during drilling
▼ Water level measured after drilling

NOTES:
(1) UNCORRECTED FIELD BLOW COUNTS
(2) METRIC EQUIVALENT DRY UNIT WEIGHT kN/m^3 = 0.1571 x DRY UNIT WEIGHT (pcf)
(3) METRIC EQUIVALENT STRENGTH (kPa) = 0.0479 x STRENGTH (psf)
(4) GRAPHIC SYMBOLS ARE ILLUSTRATIVE ONLY

MPEG MILLER PACIFIC ENGINEERING GROUP
504 Redwood Blvd.
Suite 220
Novato, CA 94947
T 415 / 382-3444
F 415 / 382-3450
www.millerpac.com

A CALIFORNIA CORPORATION, © 2018, ALL RIGHTS RESERVED

FILENAME: 2703.001 BL.dwg

BORING LOG

190 Ocean Parkway
Bolinas, California

Drawn SLM
Checked

Project No. 2703.001 Date: 8/21/2018

A-8
FIGURE

DEPTH meters / feet	SAMPLE	SYMBOL (4)	BORING X (CONTINUED)	BLOWS / FOOT (1)	DRY UNIT WEIGHT pcf (2)	MOISTURE CONTENT (%)	SHEAR STRENGTH psf (3)	OTHER TEST DATA	OTHER TEST DATA
20			SHALE Dark gray, slightly-moderately weathered, medium hard to hard, moderately strong, thinly bedded. [Bedrock]	83	107	15.9	3800 UC		
7									
25			Grades to strong	60	114	13.1			
8			End of boring at 26'-6" No groundwater encountered during exploration.						
9 30									
10									
35									
11									
12 40									

Water level encountered during drilling

Water level measured after drilling

NOTES: (1) UNCORRECTED FIELD BLOW COUNTS
(2) METRIC EQUIVALENT DRY UNIT WEIGHT kN/m^3 = 0.1571 x DRY UNIT WEIGHT (pcf)
(3) METRIC EQUIVALENT STRENGTH (kPa) = 0.0479 x STRENGTH (psf)
(4) GRAPHIC SYMBOLS ARE ILLUSTRATIVE ONLY

MPEG MILLER PACIFIC ENGINEERING GROUP
504 Redwood Blvd.
Suite 220
Novato, CA 94947
T 415 / 382-3444
F 415 / 382-3450
www.millerpac.com

A CALIFORNIA CORPORATION, © 2018, ALL RIGHTS RESERVED

FILENAME: 2703.001 BL.dwg

BORING LOG

190 Ocean Parkway
Bolinas, California

Project No. 2703.001 Date: 8/21/2018

Drawn SLM
Checked

A-9
FIGURE