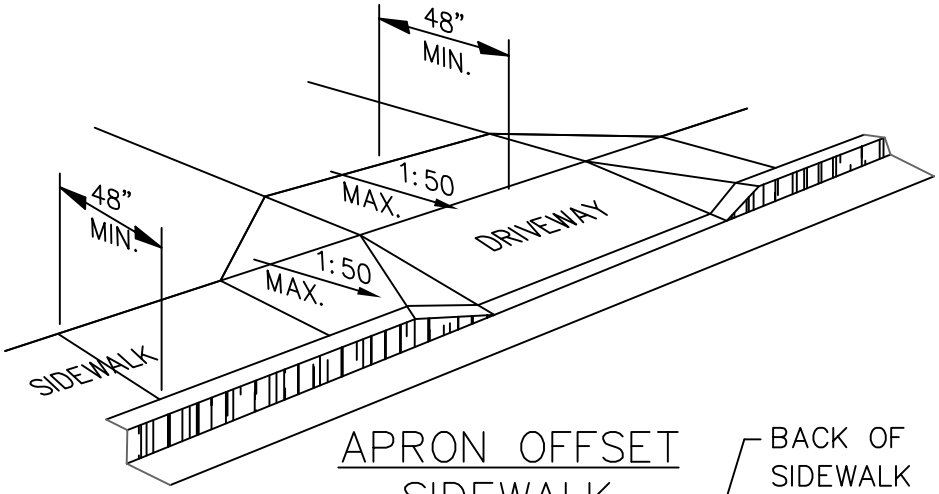

APRON OFFSET SIDEWALK

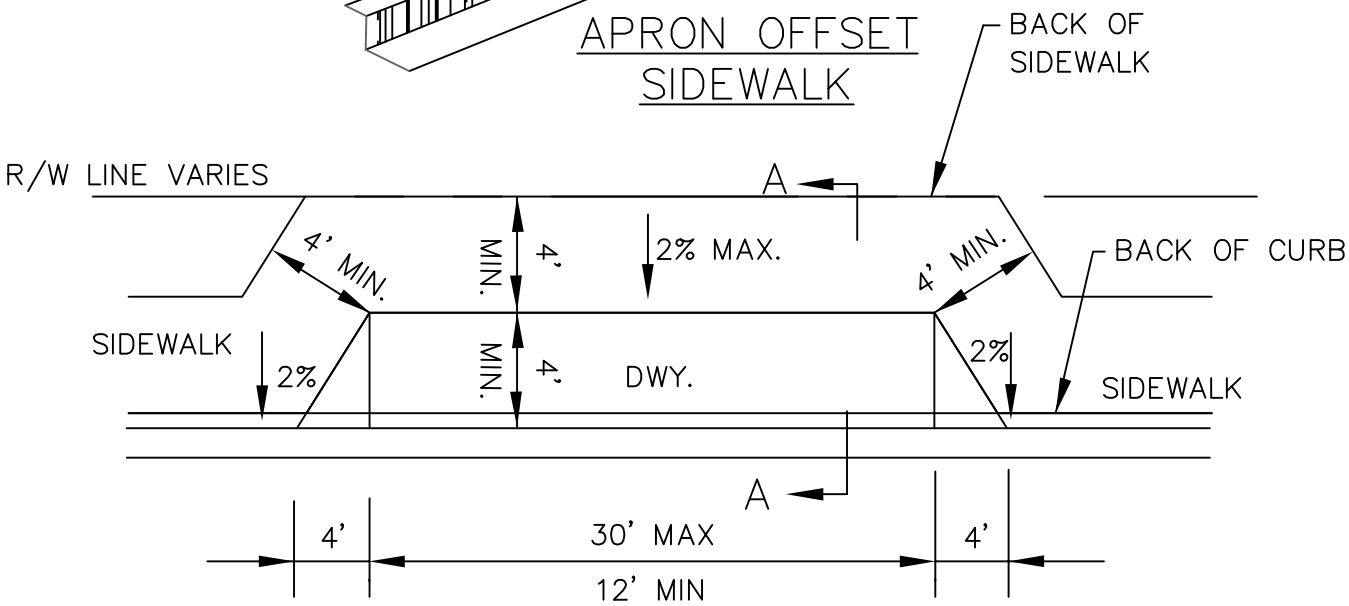

PLAN

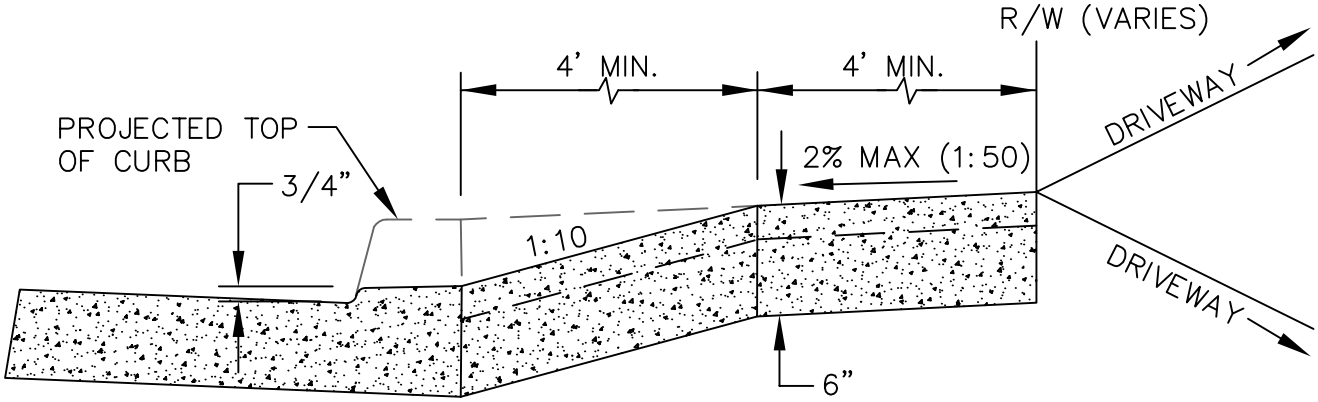

SECTION A–A

UNIFORM STANDARDS ALL CITIES AND COUNTY OF MARIN	OFFSET SIDEWALK AT DRIVEWAY				MAY 2008
					DWG. NO.
					120
		REV.	DATE	BY	

M:\Standards\County Standards (UCS)\2008 Updated County Standards